State of Alaska

Department of Transportation and Public Facilities
Southeast Region

TENAKEE SPRINGS, ALASKA
FERRY PASSENGER FACILITY
APPROACH MODIFICATION

STATE PROJECT No. 69444
DENALI COMMISSION No. 01321-00

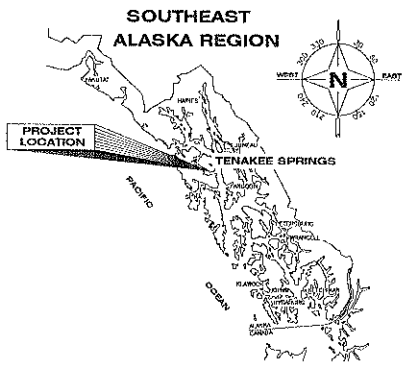

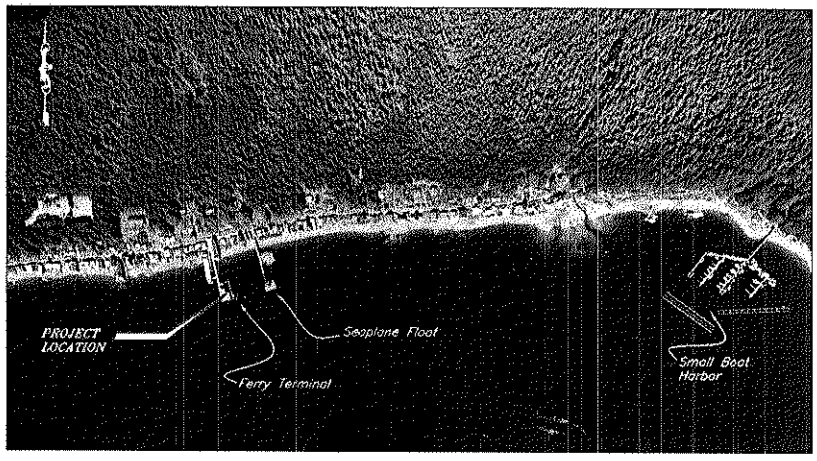

SITE MAP

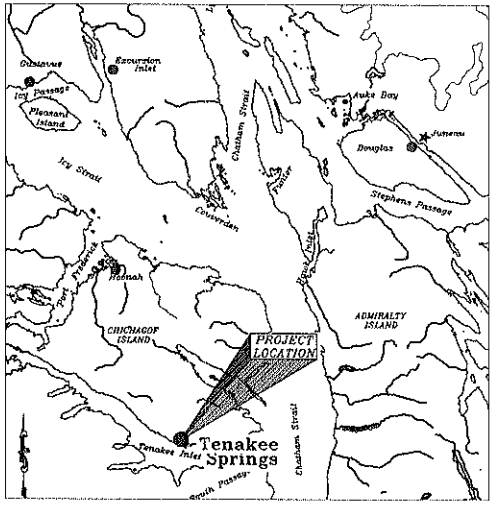

VICINITY MAP

PIH/PSE REVIEW

SHEET INDEX

SHEET NO.	DESCRIPTION
1	Title Sheet
2	Estimate of Quantities & General Notes
3	Site Plan
4	Approach Details
5	Float Repair Details

PATH: Q:\MARINE\TENAKEE\APPROACH WIDEN DENALI 2010\DESIGN 8-10\01-TITLE SHEET.DWG TAB:A-1 TITLE SHEET
Wednesday, January 19, 2011 12:38:48 PM
PLOT: PSPACE OR MSPACE: 1=1(F)

STATE OF ALASKA
DEPARTMENT OF TRANSPORTATION & PUBLIC FACILITIES
SOUTHEAST REGION

STATE OF ALASKA 49th Kirk D. Miller CE-8556 REGISTERED PROFESSIONAL ENGINEER

APPROVED:

REGIONAL PRE-CONSTRUCTION ENGINEER DATE
VICTOR M. WINTERS, P.E.

APPROVED:

DIRECTOR, SOUTHEAST REGION DATE
GARY L. DAVIS

CERTIFIED TRUE & CORRECT AS-BUILT OF ACTUAL FIELD CONDITION:

CONSTRUCTION PROJECT MANAGER DATE

STATE	PROJECT DESIGNATION	YEAR	SHEET NO.	TOTAL SHEETS
ALASKA	69444/DC01321-00	2011	1	5

Estimate of Quantities

Item No.	Pay Item	Pay Unit	Quantity
	BASIC BID		
202(1)	Demolition and Removal	Lump Sum	All Required
504(1)	Steel Approach Expansion	Lump Sum	All Required
640(1)	Mobilization and Demobilization	Lump Sum	All Required
640(4)	Worker Meals and Lodging, or Per Diem	Lump Sum	All Required
	ALTERNATE A		
202(1A)	Demolition and Removal	Lump Sum	All Required
504(2A)	Refurbish Pile Collars	Lump Sum	All Required
504(3A)	Refurbish Platform Wheels	Lump Sum	All Required

General Notes

Specifications: Per applicable Contract Documents. See Special Provisions.

Design Standards: AKDOT&PF & Southeast Region Marine Engineering Design Standards
AASHTO

Materials

Steel:

Tube Sections: ASTM A500 Grade B

Piles: Straight Seam, ASTM A252 Grade 3 or equal.

Pipe: A53, Grade B

Stainless: ASTM A276 ,type 316

Plates: ASTM A36 or equal

Steel Shapes: ASTM A992

Steel Coatings : All steel fabrications and hardware shall be hot-dip galvanized after fabrication per ASTM A123 and A153.

Bolts and Fasteners: ASTM A325 for steel connections.
ASTM A307 for timber connections.

UHMW Plastic: Ultra high molecular weight plastic (UHMW) shall be made from materials conforming to ASTM D4020. Color shall be black.

Aluminum: Shapes - ASTM 6061-T6 Plates - ASTM 5086 H112

Metal Deck Grating: Welded with 2 1/2" x 3/16" bearing bars at 1 3/16" o.c., serrated top

Welding: Unless otherwise noted on Plans or Specifications, all welding shall be done by qualified welders in accordance with AWS D1.1, D1.5, or AWS D1.2 as applicable.

Legend

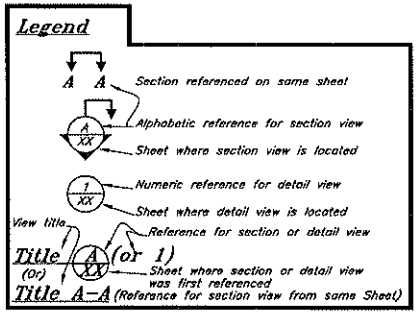

Abbreviations

SS – Stainless Steel
Galv. – Galvanized
Typ – Typical
O.C. – On Center
U.O.N. – Unless Otherwise Noted
Econ. Hd. – Economy Head
Alum – Aluminum
L – Long
W – Wide
D – Deep
FG – Finished grade
O–O – out to out
PT – Pressure treated
btm – bottom
PL – Plate
CL – Centerline
CTSK – Countersink
MI – Malleable Iron

DO NOT SCALE FROM THESE DRAWINGS USE DIMENSIONS

CHECKED BY: K. MILLER

STATE OF ALASKA
49th
Kirk D. Miller
CE-8550
REGISTERED PROFESSIONAL ENGINEER

DESIGNED BY: STAFF
DRAWN BY: STAFF

STATE OF ALASKA
DEPARTMENT OF TRANSPORTATION
& PUBLIC FACILITIES
SOUTHEAST REGION

TENAKEE FERRY PASSENGER FACILITY APPROACH MODIFICATION

ESTIMATE QUANTITIES

PATH: O:\MARINE\TENAKEE\APPROACH WIDEN DENALI 2010\DESIGN 8-10\02-ESTIMATE QUANTITIES.DWG
TAB: 02-ESTIMATE QUANTITIES Monday, January 24, 2011 4:49:58 PM

REVISIONS			PROJECT DESIGNATION	YEAR	SHEET NO.	TOTAL SHEETS
NO.	DATE	DESCRIPTION	69444/DC01321-00	2011	2	5

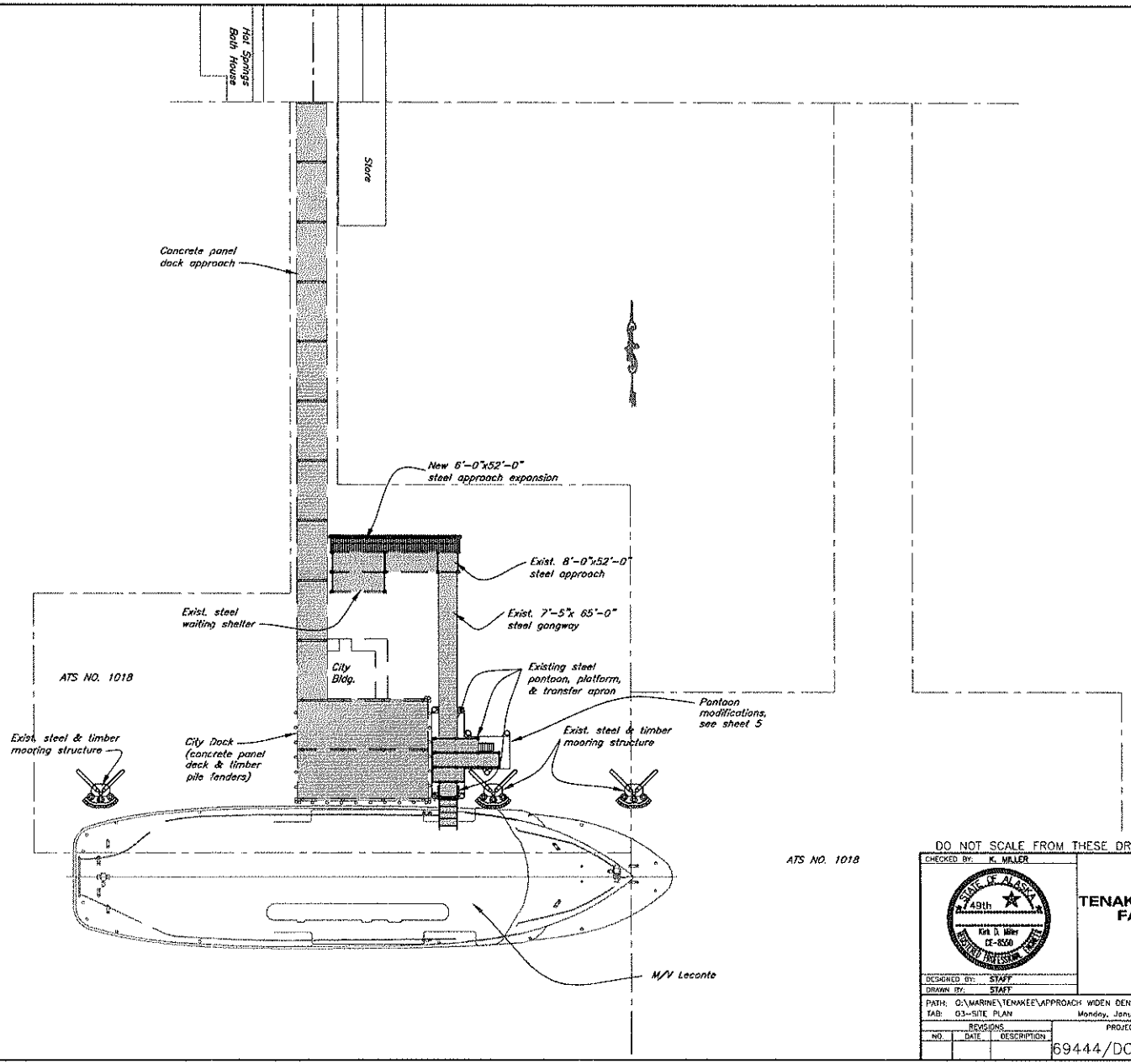

DO NOT SCALE FROM THESE DRAWINGS USE DIMENSIONS

CHECKED BY: K. MILLER

STATE OF ALASKA
DEPARTMENT OF TRANSPORTATION
& PUBLIC FACILITIES
SOUTHEAST REGION

STATE OF ALASKA 49th Kirk D. Miller CE-8560 REGISTERED PROFESSIONAL ENGINEER

TENAKEE FERRY PASSENGER FACILITY APPROACH MODIFICATION

SITE PLAN

DESIGNED BY: STAFF
DRAWN BY: STAFF

PATH: O:\MARINE\TENAKEE\APPROACH WIDEN DENALI 2010\DESIGN 8-10\03- SITE PLAN.DWG
TAB: 03-SITE PLAN Monday, January 24, 2011 5:28:37 PM

REVISIONS			PROJECT DESIGNATION	YEAR	SHEET NO.	TOTAL SHEETS
NO.	DATE	DESCRIPTION	69444/DC01321-00	2011	3	5

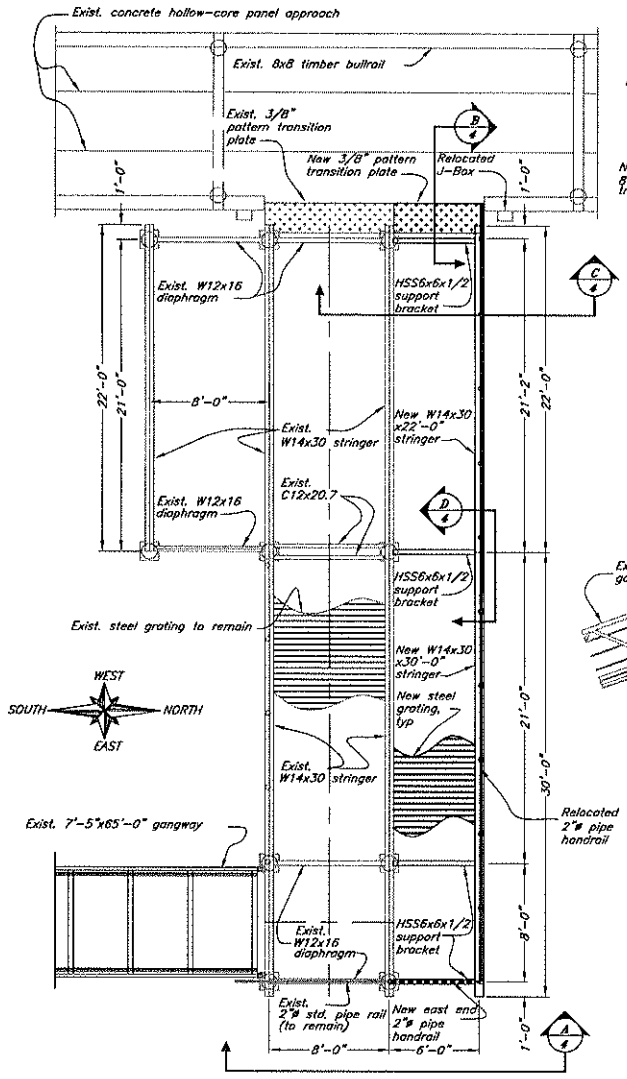

Tenakee Gangway Approach Expansion Plan

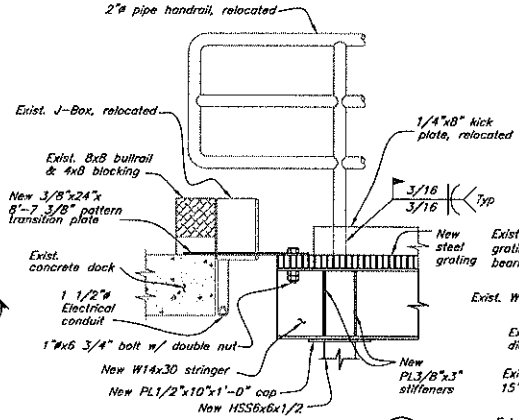

Typ Transition Plate Section (B/4)

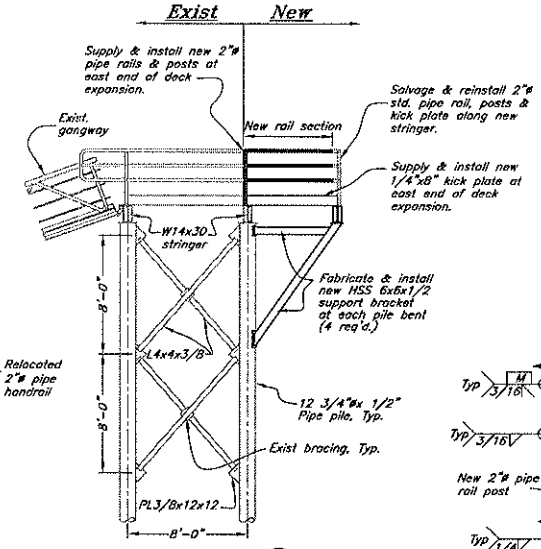

Elevation View (A/4)

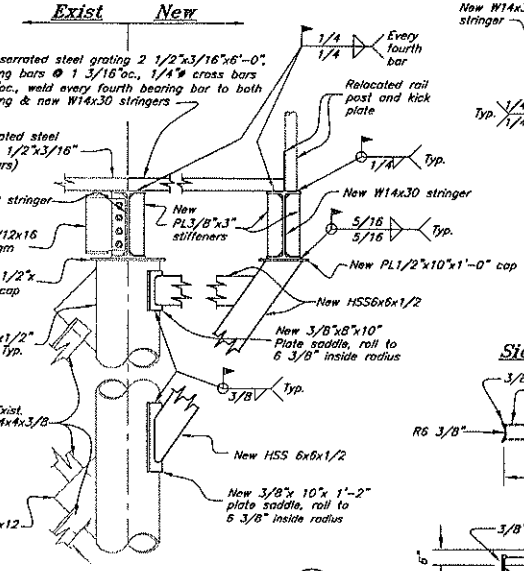

Support Bracket Typ. Section (C/4)

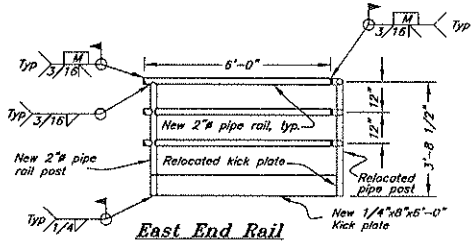

East End Rail

New End Handrail Details

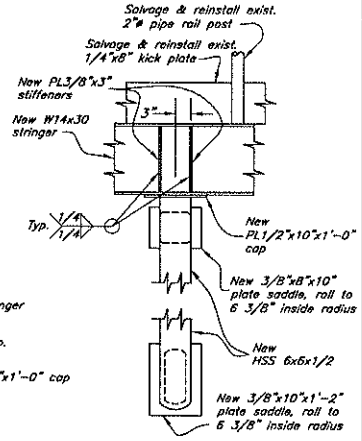

Side View Section (D/4)

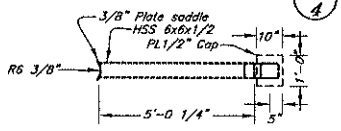

Profile

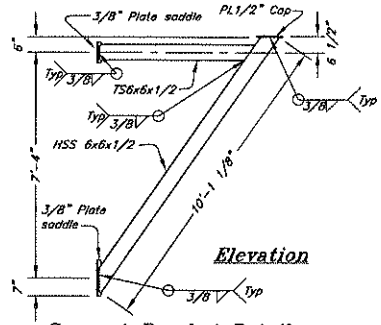

Elevation

Support Bracket Details

DO NOT SCALE FROM THESE DRAWINGS USE DIMENSIONS

CHECKED BY: K. MILLER

STATE OF ALASKA 49th Kirk D. Miller CE-8550 REGISTERED PROFESSIONAL ENGINEER

DESIGNED BY: STAFF

DRAWN BY: STAFF

STATE OF ALASKA
DEPARTMENT OF TRANSPORTATION & PUBLIC FACILITIES
SOUTHEAST REGION

TENAKEE FERRY PASSENGER FACILITY APPROACH MODIFICATION

APPROACH DETAILS

PATH: O:\MARINE\TENAKEE\APPROACH WIDEN DENALI 2010\DESIGN 8-10\04-APPROACH DETAILS.DWG
TAB: 04-APPROACH DETAILS Monday, January 31, 2011 9:53:33 AM

REVISIONS NO.	DATE	DESCRIPTION	PROJECT DESIGNATION	YEAR	SHEET NO.	TOTAL SHEETS
			69444/DC01321-00	2011	4	5

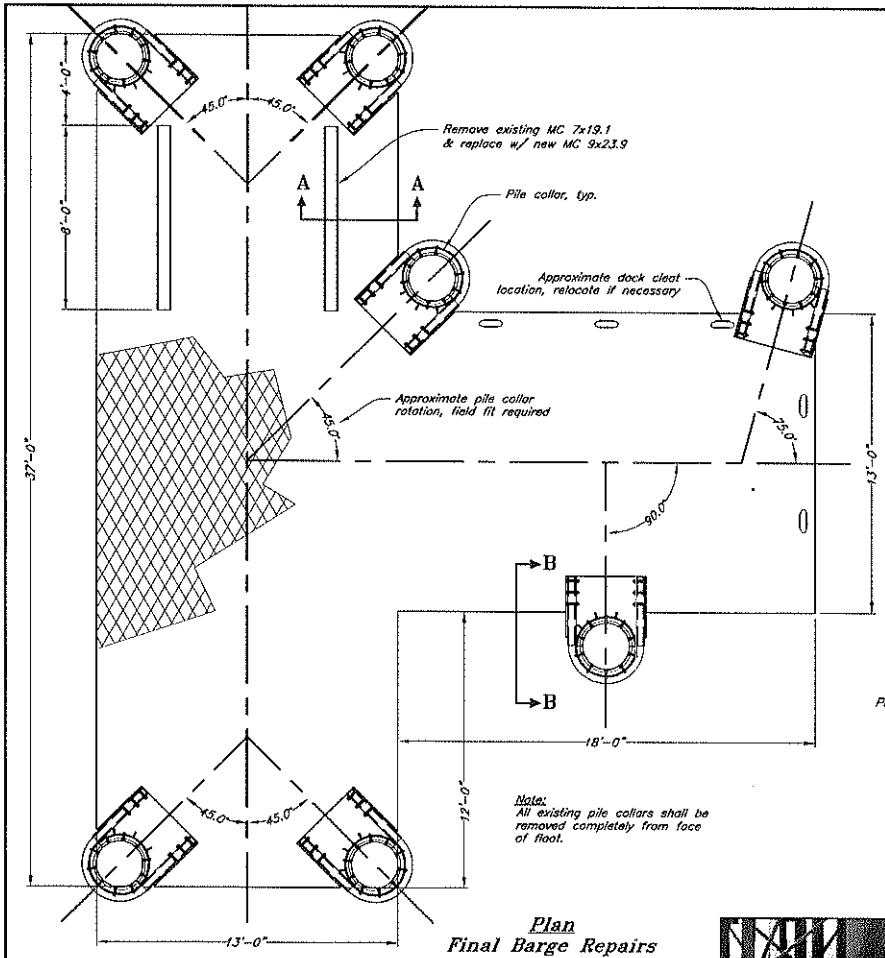

Plan
Final Barge Repairs

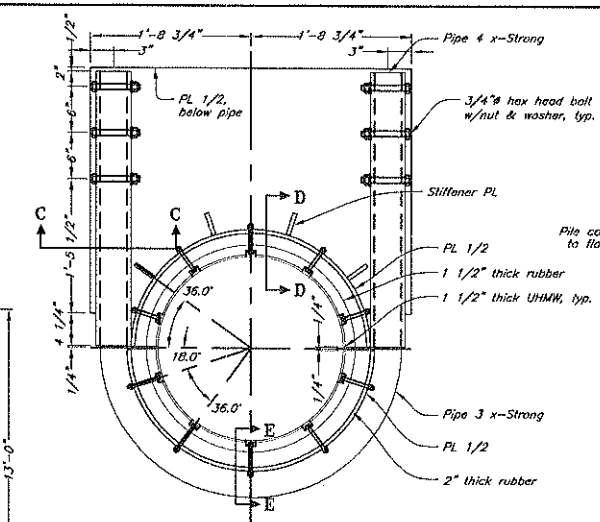

Plan-Pile Collar

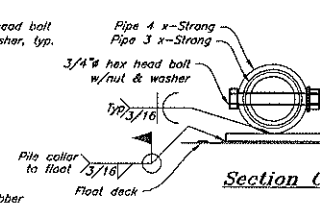

Section C-C

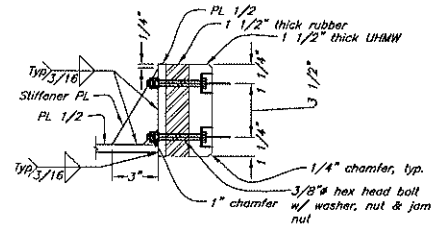

Section D-D

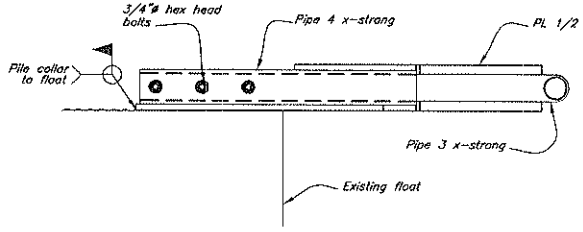

Elevation B-B

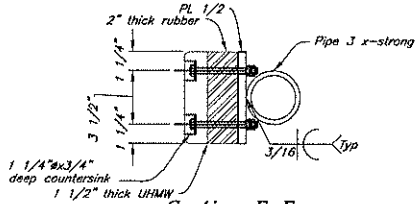

Section E-E

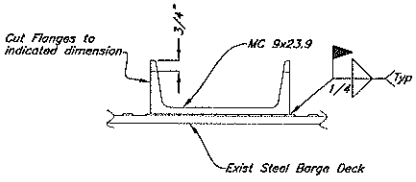

1. Field Center new skid in gangway track

Gangway Skid
Section B-B

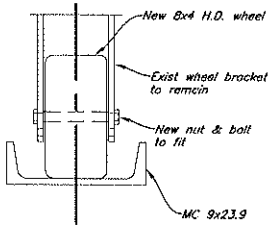

New Gangway
Wheel Detail

Existing Pile Collar

DO NOT SCALE FROM THESE DRAWINGS USE DIMENSIONS

CHECKED BY: K. MILLER

STATE OF ALASKA
49th
Kirk D. Miller
OC-8550
REGISTERED PROFESSIONAL ENGINEER

STATE OF ALASKA
DEPARTMENT OF TRANSPORTATION
& PUBLIC FACILITIES
SOUTHEAST REGION

TENAKEE FERRY PASSENG FACILITY APPROACH MODIFICATION

DESIGNED BY: STAFF
DRAWN BY: STAFF

PILE COLLAR DETAIL

PATH: Q:\MARINE\TENAKEE\APPROACH WIDEN DENALI 2010\DESIGN 8-10\05-PILE COLLAR DETAILS 2.DN
TAB: 05-PILE COLLAR DETAILS Monday, January 24, 2011 4:17:25 PM

REVISIONS			PROJECT DESIGNATION	YEAR	SHEET NO.	TOTAL SHEETS
NO.	DATE	DESCRIPTION	69444/DC01321-00	2011	5	5