CEPOA-EN-G-HH October 24, 2012

Memorandum for Record

Subject: Kake Intermodal Transit Facility Construction Inspection Report

1. Purpose of visit and general information:

This trip report documents the site visit to Kake, Alaska on August 21, 2012 to perform a construction inspection of the Kake Intermodal Transit Facility (ITF) as part of the AKV273 (148841) Construction Inspection Services agreement. The purpose of this visit was to evaluate the condition of the new facility. This report addresses the quality of construction only and does not constitute an evaluation of the design of the project.

2. Background:

The Kake Intermodal Transit Facility is located adjacent to the old cannery in Kake which is designated as a National Historic Landmark. The facility consists of a new rock and gravel fill upland parking area, 144 foot vehicle transfer bridge and a 180 foot by 31 foot drive down float (Figure 2).

3. Trip Summary:

The team met in Juneau on the morning of August 21 and travelled to Kake via Air Excursions. The team arrived at Kake around 0900. Weather at the time was calm and overcast. Inspection of the ITF began about 1100, continued to 1300 and resumed at 1530 and concluded at 1630. Tide predictions for Entrance Island, about 10 miles to the south of Kake show a low tide of -0.5 feet Mean Lower Low Water (MLLW) at 0956 and a high tide of +15.7 feet MLLW at 1412. The team departed Kake at 1700 that afternoon and returned to Anchorage.

4. ITF Condition Summary:

At the time of inspection, the ITF was in the final stages of construction. Work on the uplands had been completed and the float and transfer bridge were in place. A crew from Western Marine was nailing the decking to the float and performing site cleanup activities. A representative from PND Engineers was on site and permitted the team access to the work site. All completed works were found to be in conformance with the plans and specifications and no major deficiencies were noted. Monitoring of the armored slopes should be performed regularly and after storm events.

5. Uplands:

The uplands were complete at the time of inspection and were in use as a staging area for the contractor's vehicles and equipment. The uplands consist of a gravel parking area protected by rock armored slopes and a mechanically stabilized earth (MSE) marine sea wall where the uplands approach one of the cannery buildings. Access to the cannery buildings was provided by a timber deck. The surface of the uplands was sloped to two drain points which were routed to a storm drain to an outfall at the seaward edge. The

downstream drain contained an oil-water separator (OWS) to prevent discharge of petroleum, oil and lubricants (POL) into the ocean. The uplands were found to be constructed according to plan with no significant deficiencies found in the inspection. The PND representative noted that the Organized Village of Kake has plans to expand the uplands to the south of this facility and adjusted the storm drain inlet accordingly.

a. Gravel surface:

   The gravel surface of the uplands was constructed of crushed aggregate as required by the specifications of the job. The surface was smooth and sloped to drain to the inlets of the storm drain system.

b. MSE marine sea wall:

   The MSE marine sea wall appeared to have been constructed as specified. Fabric reinforcement details were not visible in the wall's finished state and could not be verified. Rock placement at the toe of the wall appeared to exceed the height requirements shown in the plans (Figure 4).

c. Armor rock slope:

   Armor rock appeared to meet the specified gradation based on cursory visual inspection; the median stone size of 2000 pounds would equate to a stone size of roughly 2.5 feet. Armored slopes were smooth and regular and stone placement appeared to have a uniform distribution of stone sizes (Figure 6). One large stone near the shoreward end of the uplands was found to rock easily and may shift in future storm events, however this was not considered to be representative of the overall placement of the armor. Exposed fabric was found under the transfer bridge (Figure 11) where the armor thickness was reduced to 2 feet to allow for clearance of the bridge at low tide. This thin section of armor should be inspected regularly and after every major storm event to ensure that the foundation soils under the bridge abutment are protected. Exposed fabric could be covered by fitting smaller stones into the gaps between armor stones, but care must be taken to maintain clearance for the bridge should this be done. The edge of the gravel surface of the uplands is not armored and should also be monitored for erosion.

d. Storm drain:

   The storm drain inlets were placed at low points on the uplands surface and the outfall was constructed as shown in the plans (Figure 7). The OWS was found at the downstream inlet grate (Figure 8). The outfall was observed to be above high tide by a few inches (Figure 9). Intrusion of seawater into the storm drain is expected. The outlet elevation of the oil water separator is approximately 4 inches above the invert of the outfalls leaving the potential for sea water to back up the pipe during storms and enter the OWS. This is not expected to cause a release of POL from the OWS and does not constitute a deficiency in the facility.

6. Transfer Bridge:

The transfer bridge was complete at the time of inspection and in use to provide equipment access to the drive down float. The bridge was constructed in accordance with the plans and specifications. No major deficiencies were discovered in the inspection process. Features noted during the inspection are listed below:

a. Bridge abutment:

The concrete abutment at the seaward edge of the uplands was found to be constructed in accordance with the plans and specifications (Figure 10). Abutment bearings slide to allow the bridge to adjust in response to tidal variations. Some exposed fabric was found between armor stones under the bridge (Figure 11). Due to the thickness of the armor under the bridge (2 feet instead of 5 feet elsewhere), the armor is essentially one rock thick and some exposed fabric can be expected. These exposed areas could be filled with smaller rock, however care must be taken to ensure that clearance for the bridge is maintained. As stated previously, this area should be a key point in a regular inspection program to ensure the bridge abutment foundation material does not wash out.

b. Bridge deck:

The bridge deck is a welded bar grate with timber curbs and chain link fences on each side. A handrail on the south side of the bridge facilitates pedestrian access. Bird spikes were attached to the top chord of the bridge trusses (Figure 12). Light pole bases were found on the north side of the bridge. The bridge appeared to be of sound fabrication and installation. No major deficiencies were found of the bridge.

c. Bridge support float:

The transfer bridge included a support float to balance the buoyancy of the drive down float. This was to ensure that the drive down float remains level in an unloaded condition. The float was attached to the bridge in accordance with the plans and specifications (Figure 13).

d. Center bearing and slide bearings:

The transfer bridge was restrained by a single four inch pin at the bottom of the ramp (Figure 15). Support was provided by means of two slide bearings (Figure 14). This arrangement allows the bridge to rotate with respect to the float. Tidal variations are compensated for in the slide of the abutment bearings at the top of the bridge. To ensure the bridge does not lift off the restraining pin, the bottom end of the ramp is tethered to the float with two chains; one at each bottom corner of the ramp.

7. Drive Down Float:

The drive down float was assembled and in place at the time of the inspection. The construction crew was attaching decking to the floats during the inspection and some underwater work was in progress (Figure 20). The float was assembled from seven shop fabricated float modules which were bolted together on site. The dock was found to be in good condition with no significant construction deficiencies noted. Features noted during the inspection are listed below:

a. Transfer bridge transition apron:

The transition apron is a welded steel plate assembly that is intended to be fixed to the deck of the float (Figure 17). At the time of construction, the apron was in place, but not secured to the deck, likely to facilitate finish work on the float. Since the transfer bridge is fixed at the float through the pin, the transition plate between the bridge and the apron will have only minimal slide through the tide cycle.

b. Pile hoops:

The pile hoops are welded pipe steel assemblies that bolt onto the float frame. Pile guides are ultra-high molecular weight polyethylene (UHMW) strips mounted on rubber arch fenders (Figure 18). The PND Engineers representative noted that there was a minor rubbing issue in two of the pile hoops due to pile positioning, but the issue was minor and could be corrected by modifying the fenders if necessary. No significant wear was noted on the piles or UHMW rub strips at the time of inspection. Since the piles are spiral welded, severe wear is possible from rubbing of the raised weld against the UHMW.

c. Seaplane float attachment:

While the seaplane float was not part of the contract, the attachment points were integral to the drive down float and constructed under this contract. The seaplane float attaches with a connection similar to the transfer bridge's pin and slide bearing design (Figure 19). The bearing pads and pin appeared to be in good condition.

d. Timber deck:

The timber deck of the drive down float was constructed of 4x (3-1/2 inches thick) treated timber decking. The decking was specified to be No. 1 or better coastal region Douglas Fir pressure treated with ammoniacal copper zinc arsenate **(**ACZA) to a minimum of 0.6 pounds per cubic foot, which is an industry standard for timber above the waterline in marine structures. Decking was to be placed with a gap of 1/8 inches to 3/8 inches between planks to allow for drainage. Visual inspection confirmed placement within these tolerances. The team observed the fastening process and observed that the required pilot holes were drilled and the specified fasteners were used (Figure 21).

e. Bullrails:

The seaward bull rail was constructed at the time of the inspection and conformed to the plans and specs. The bullrails were 8 x 8 pressure treated lumber mounted onto 6 inch diameter UHMW bullrail posts with 1 inch economy head bolts. Gaps in the bull rail were designed to facilitate snow removal. Steel posts were designed to prevent the plowing vehicle from driving off the float (Figure 22).

f. Bollards:

Galvanized steel bollards were designed to be mounted directly to the steel frame of the float. The team found that the bollards were welded to base plates which were welded to the steel frame of the float as specified in the plans (Figure 25).

g. Life ring cabinets and fire extinguishers:

Life ring and fire extinguishers were not installed at the time of inspection; however the equipment and cabinets were staged at the proper locations (Figure 23).

8. Photos taken during the inspection are included below; additional photos are available by contacting the undersigned.

9. For additional information please contact Robert Tedrick (phone 907-753-5745, email Robert.C.Tedrick@usace.army.mil) or Nathan Epps (phone 907-753-5760, email Lewis.N.Epps@usace.army.mil)

Robert Tedrick, P.E.
Structural Engineer
CEPOA-EN-G-HH

Lewis Nathan Epps, P.E.
Structural/Hydraulic Engineer
CEPOA-EN-G-HH

Enclosures: 24 Figures

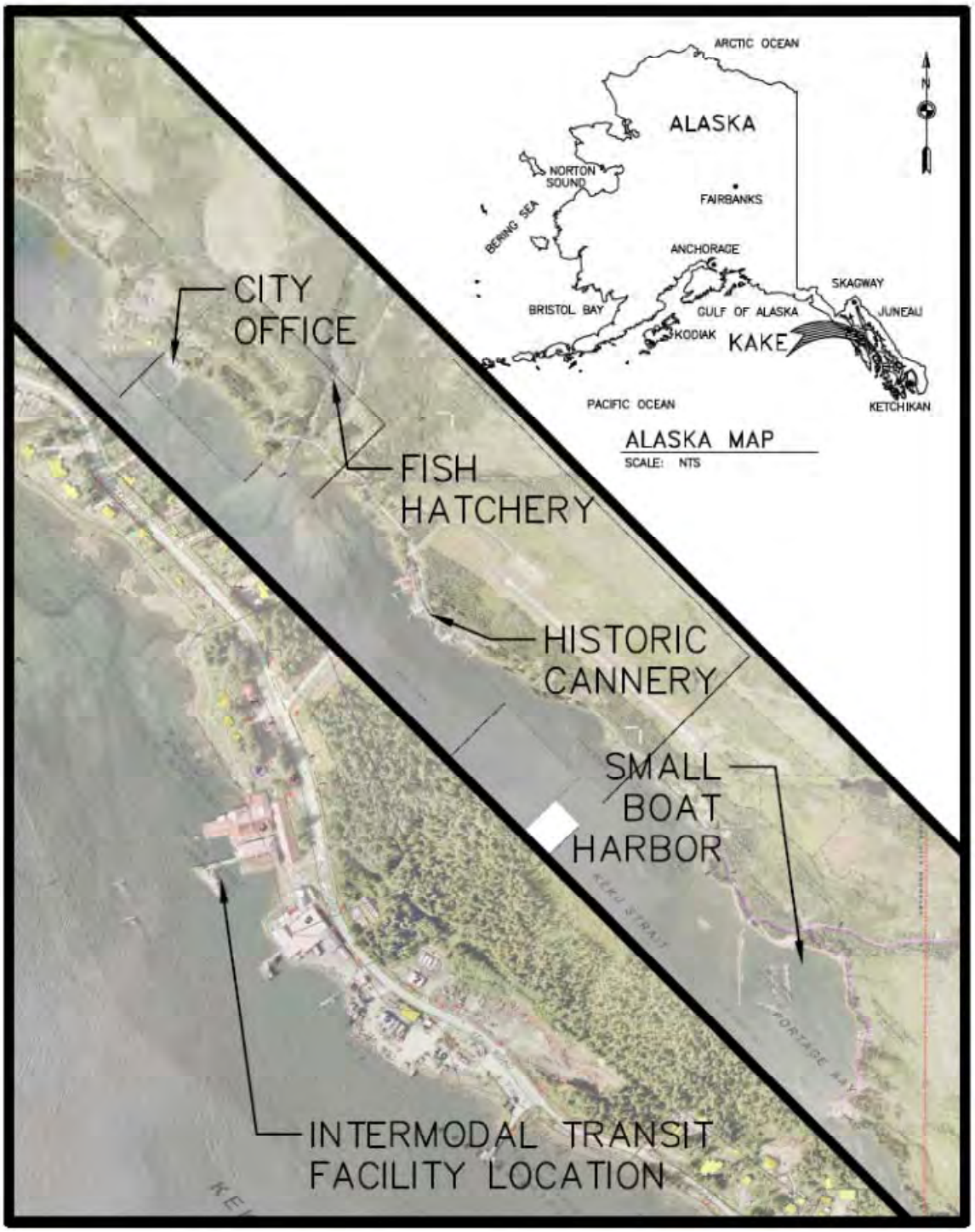

Figure 1: Location and vicinity of Kake Intermodal Transit Facility

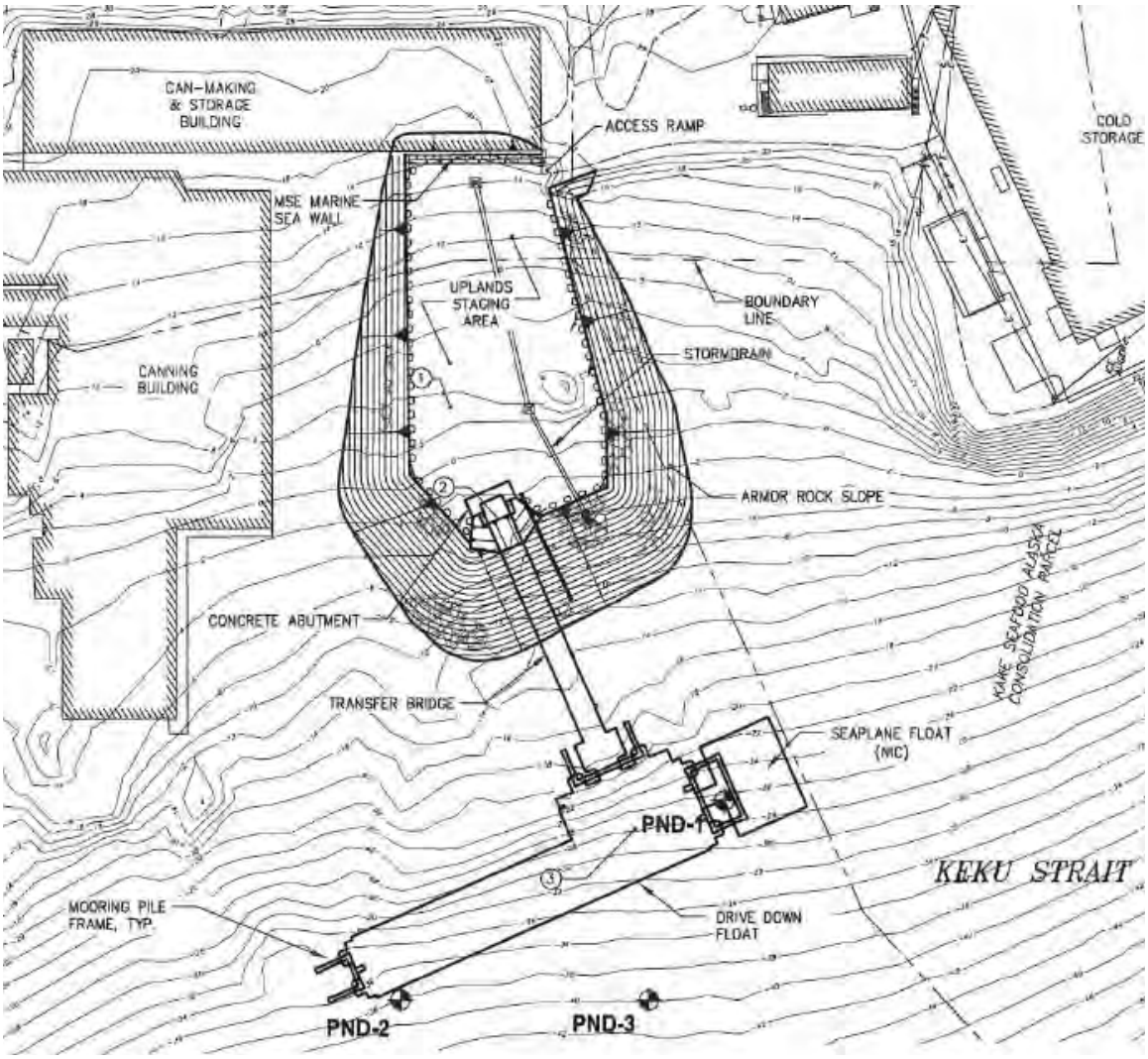

Figure 2: Plan view if the ITF showing major features of the work. Major features completed or substantially complete include the uplands, storm drain, armor rock slope, transfer bridge and drive down float. The seaplane float was not part of the contract.

Figure 3: Uplands overview. Major features of uplands; gravel surface, barrier rocks, rock armored slopes. The gravel surface was graded to drain to two storm drain inlets to route all surface runoff from the uplands through an oil water separator before discharging to the ocean.

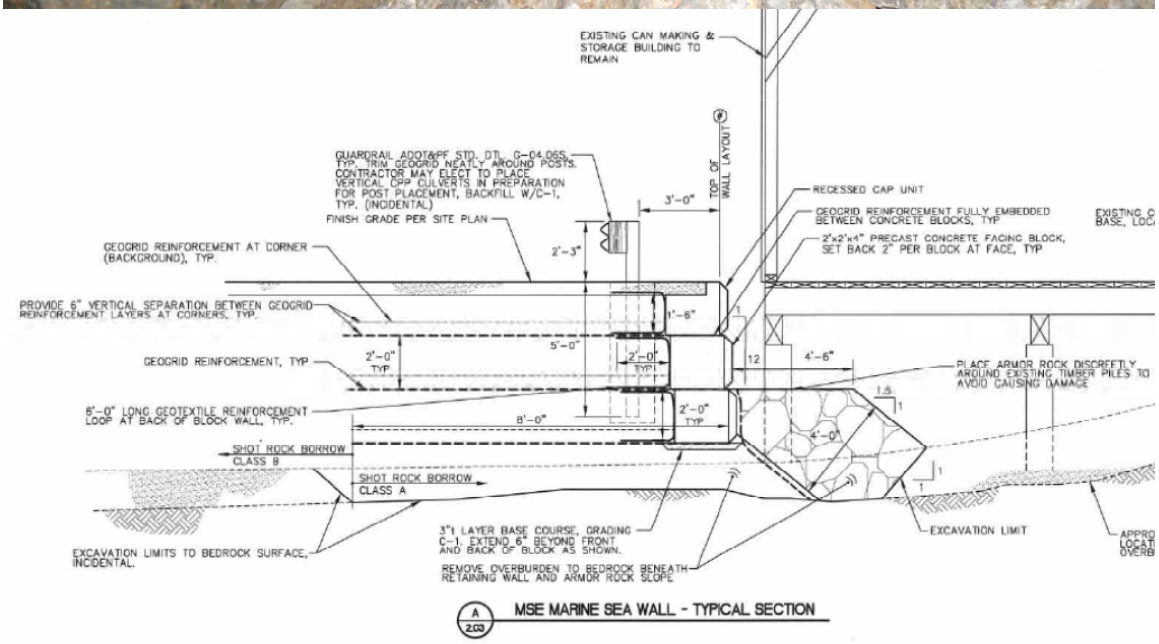

Figure 4: MSE marine sea wall details. Rock toe protection was provided under the timber deck as required by the plans and specifications.

Figure 5: Guardrail at the top of the MSE marine sea wall. A timber deck (foreground) provides access to the cannery buildings

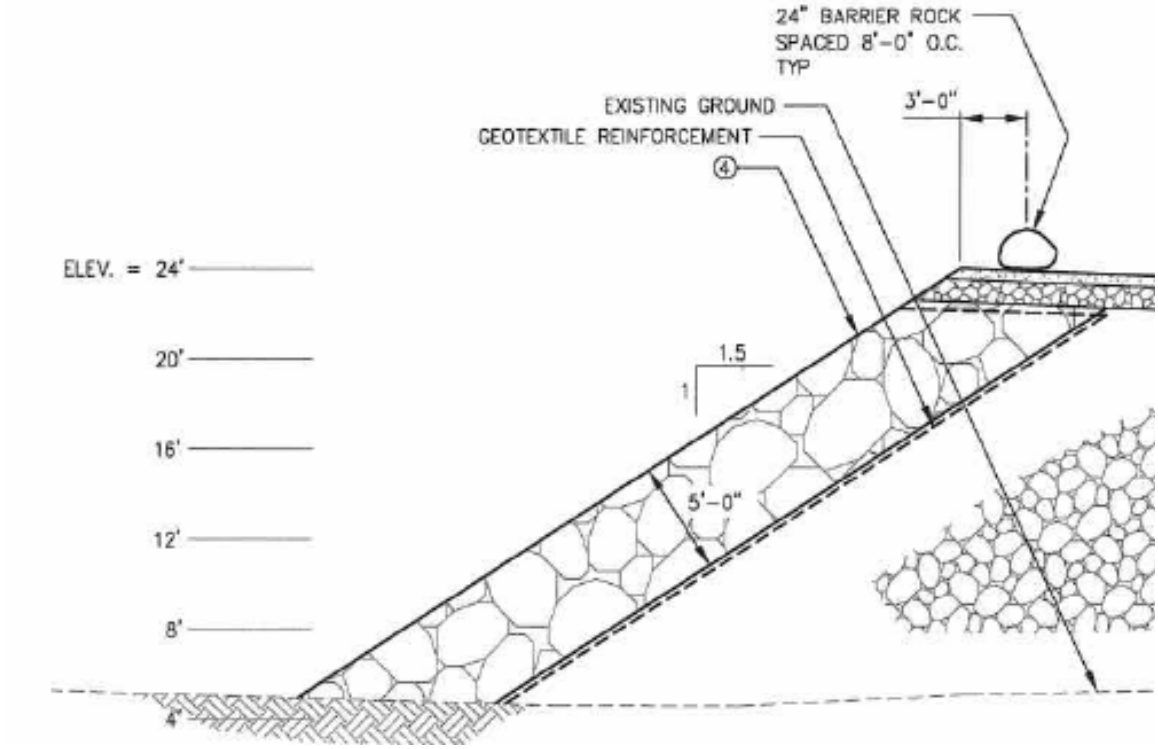

Figure 6: Typical armored slope. Armor does not extend up the full slope of the uplands to protect the gravel surface. Maintenance of the gravel may be required after storm events.

Figure 7: Storm drain inlets. The downstream inlet (bottom photo) was constructed according to the plans. The concrete apron around the upstream inlet (see detail in Figure 3) was omitted due to future plans to expand the uplands (top photo). If the apron were constructed, it would have been demolished when the uplands expansion were built to connect new manholes to the storm sewer.

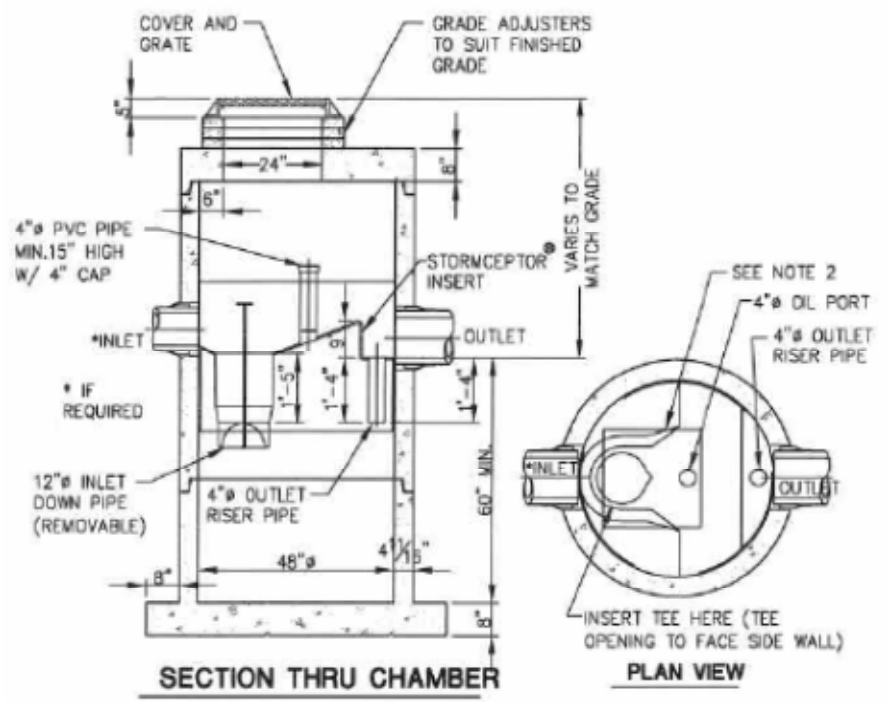

Figure 8: Oil water separator details. Most of the oil water separator is not visible for inspection, however the down pipe inlet seen in the photo conforms with the plans and specifications.

Figure 9: Storm drain outlet at low tide (top) and high tide (bottom). Seawater will enter the outlet at high tide during storm events. The outlet elevation of the oil water separator is only 5 inches above the outfalls invert.

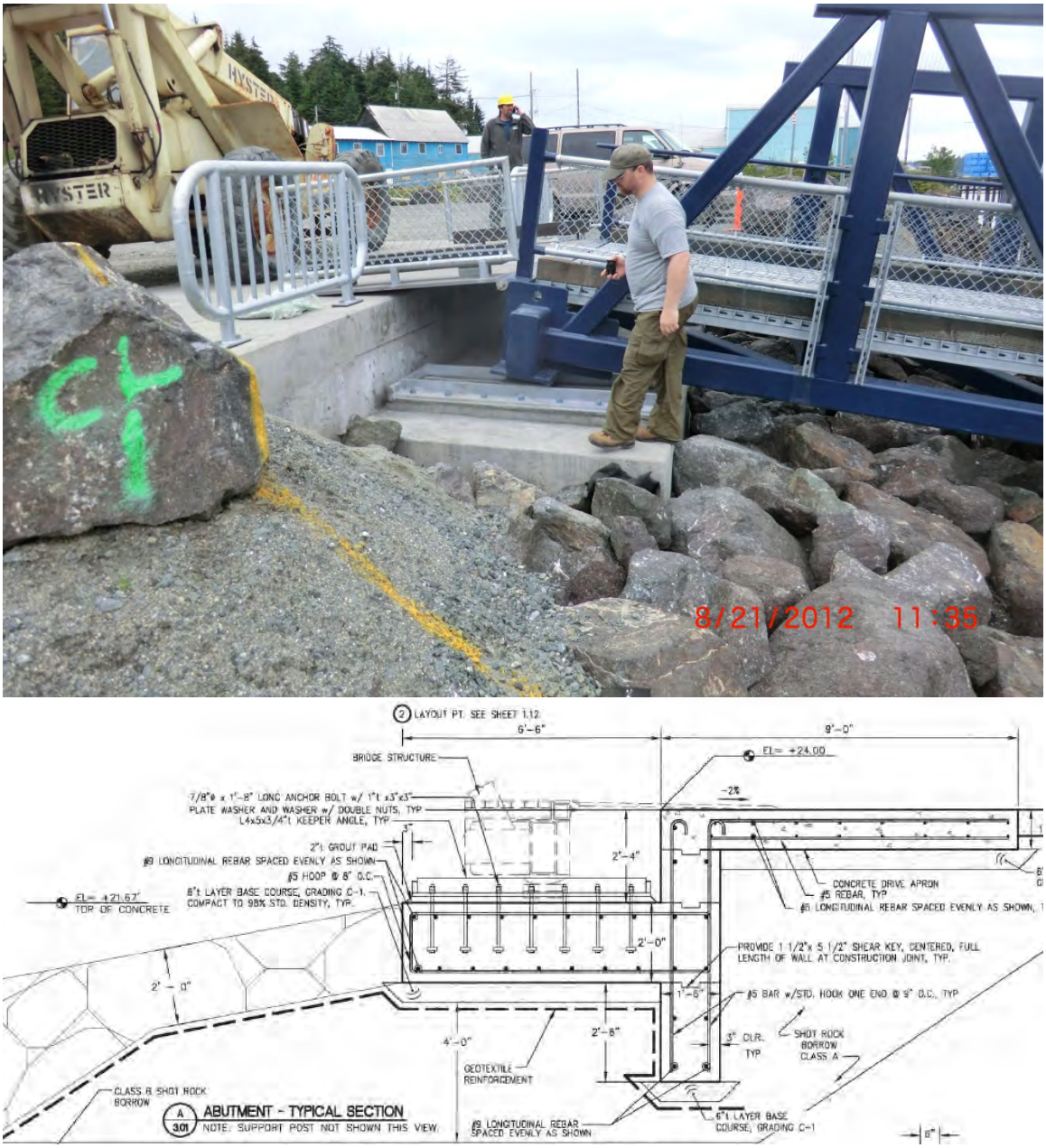

Figure 10: Transfer bridge abutment and bearing details. Length adjustments for varying tide levels are made at the upper end of the bridge.

Figure 11: Exposed fabric beneath the armor under the bridge. Plans show a 2 foot thick section of armor under the bridge to provide clearance for the low tide position of the bridge. These exposed areas could be filled with smaller stones, but may require maintenance after storm events to ensure the bridge abutment is adequately armored.

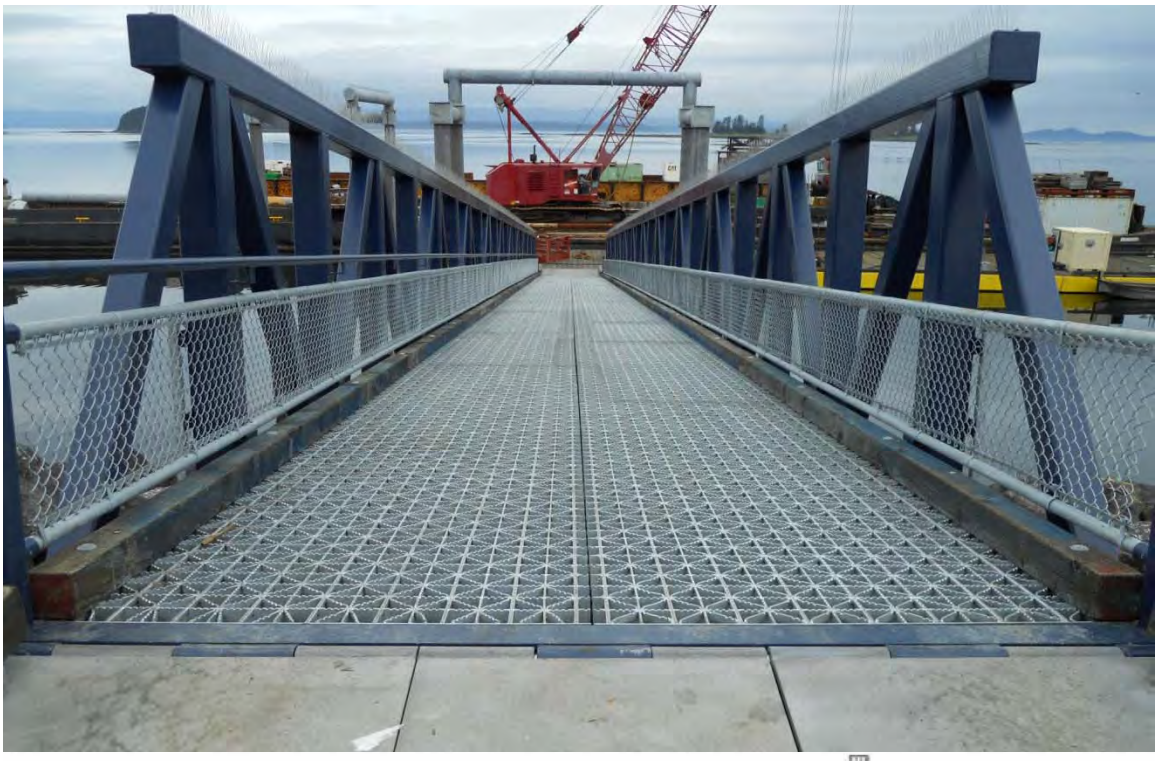

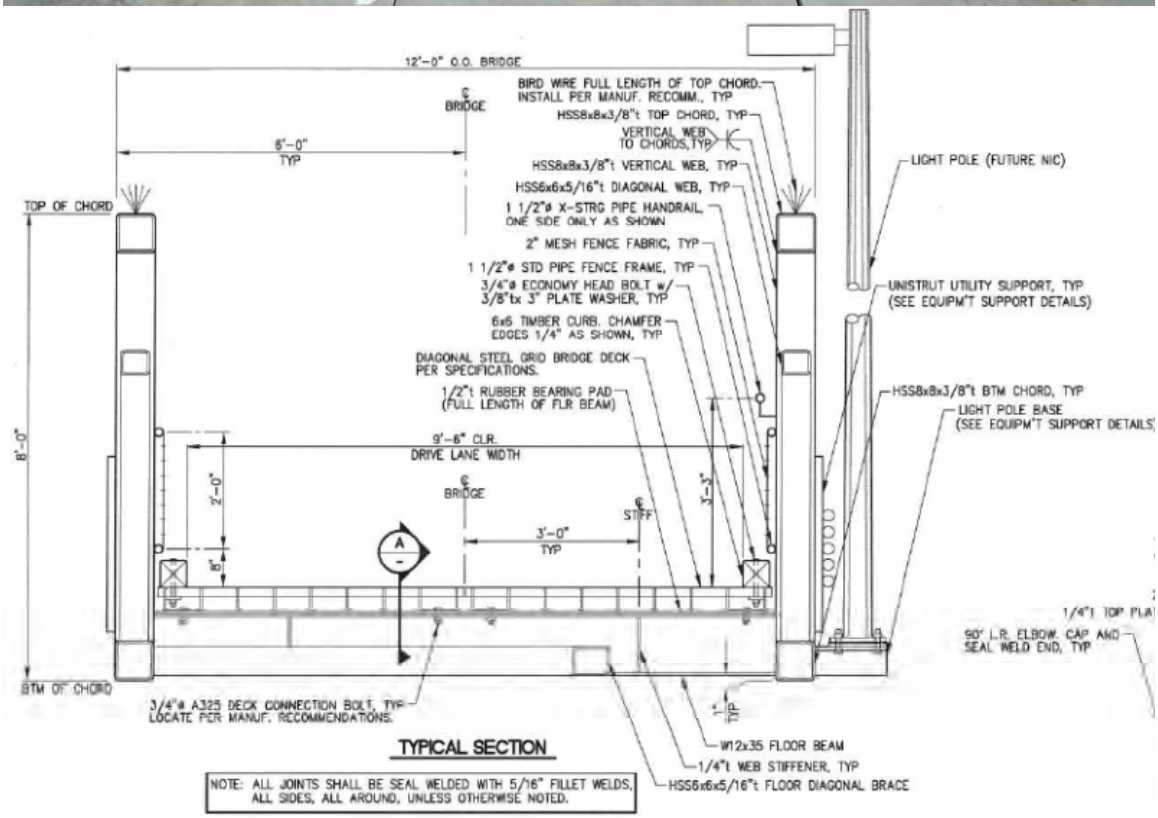

Figure 12: Transfer bridge typical section details. All contract details were found to be constructed according to the plans. Note that the light poles were not in this contract.

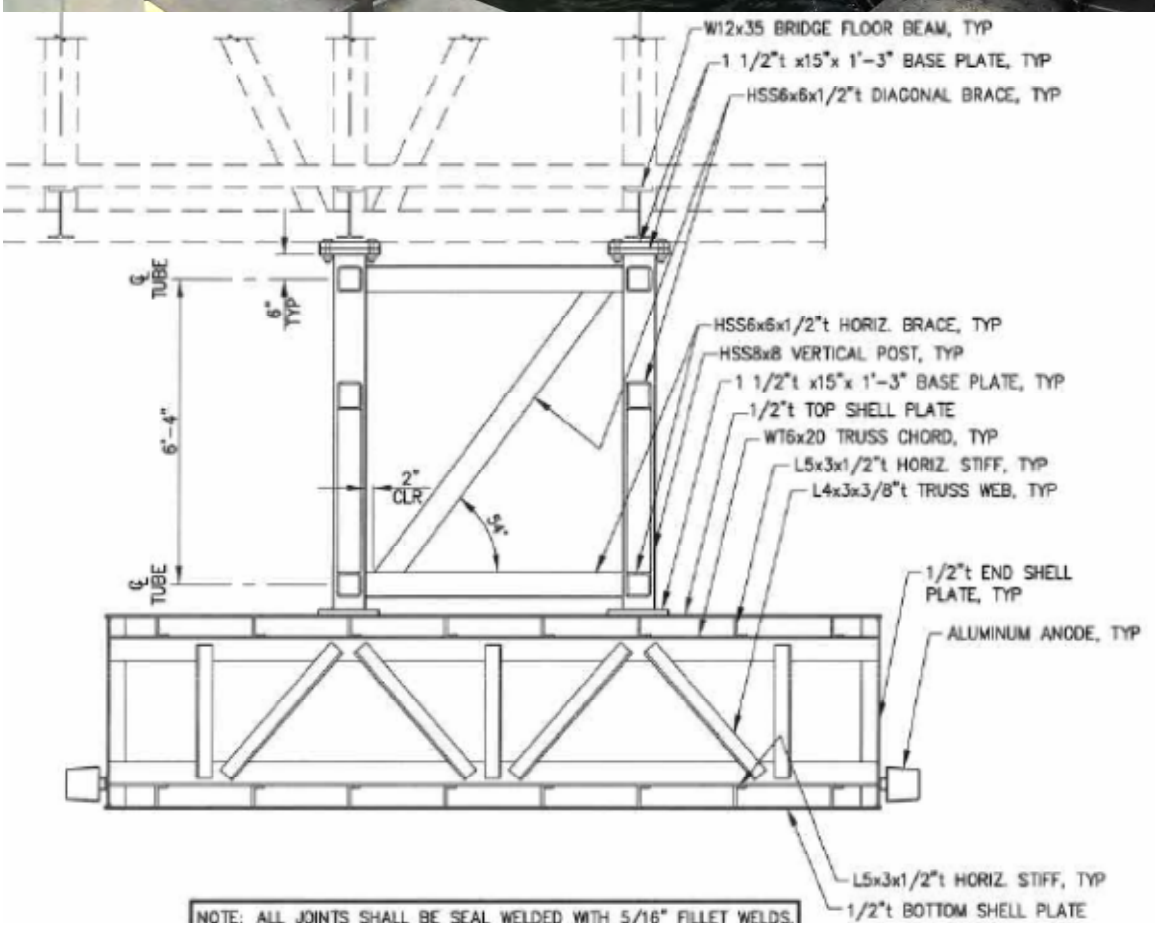

Figure 13: Bridge support float, typical details.

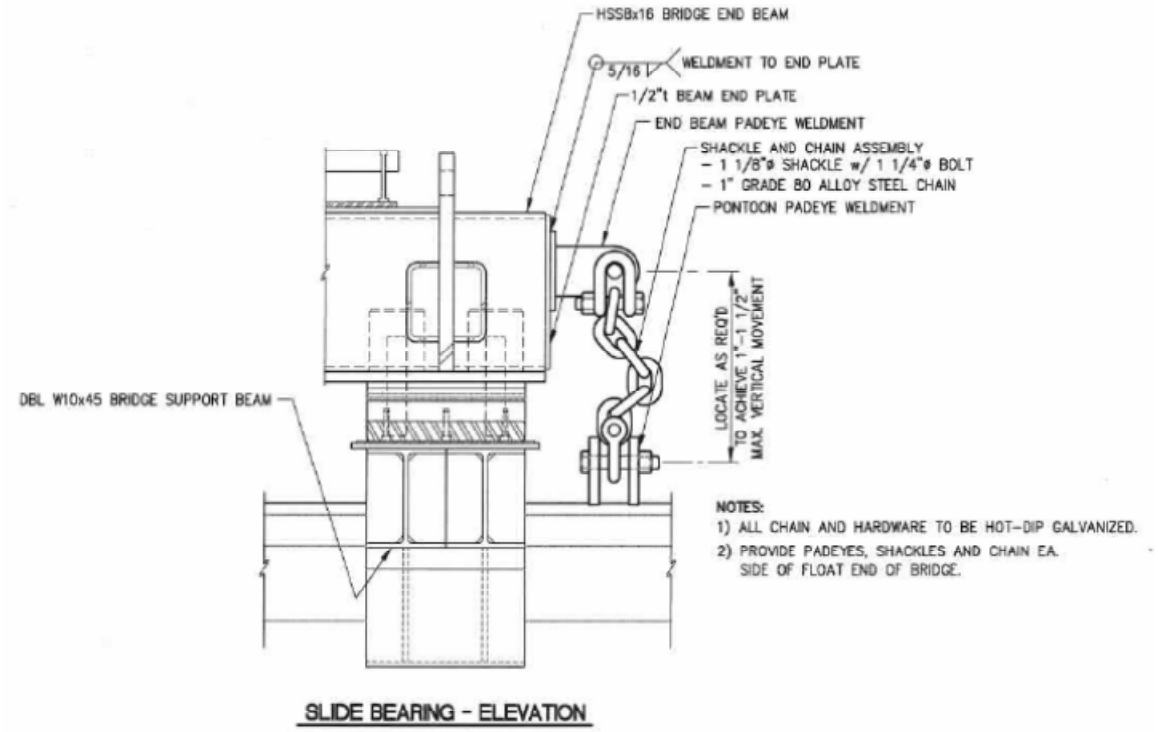

Figure 14: Slide bearing details. The bottom supports of the bridge are unrestrained, however chain tethers are provided to ensure the bridge does not lift off the mounting pin at the center of the end beam.

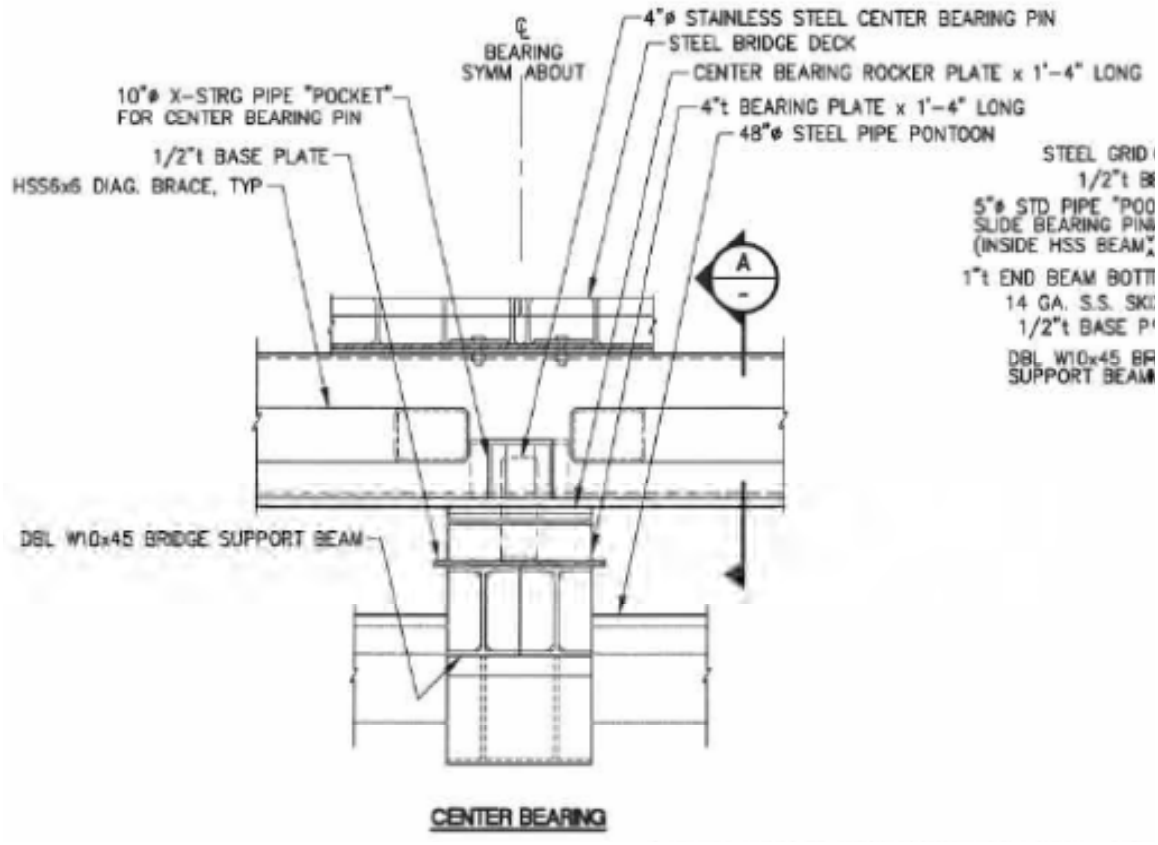

Figure 15: Center bearing details. The transfer bridge is fixed in place with a 4 inch stainless steel pin. Note the detail drawing shows the opposite side of the end beam of the bridge, hence the diagonal braces cannot be seen in the photo and the web stiffeners are not shown in the detail.

Figure 16: Transfer bridge slopes at low tide (top) and high tide (bottom). The concrete abutment surface is shown at +24 feet MLLW in the drawings.

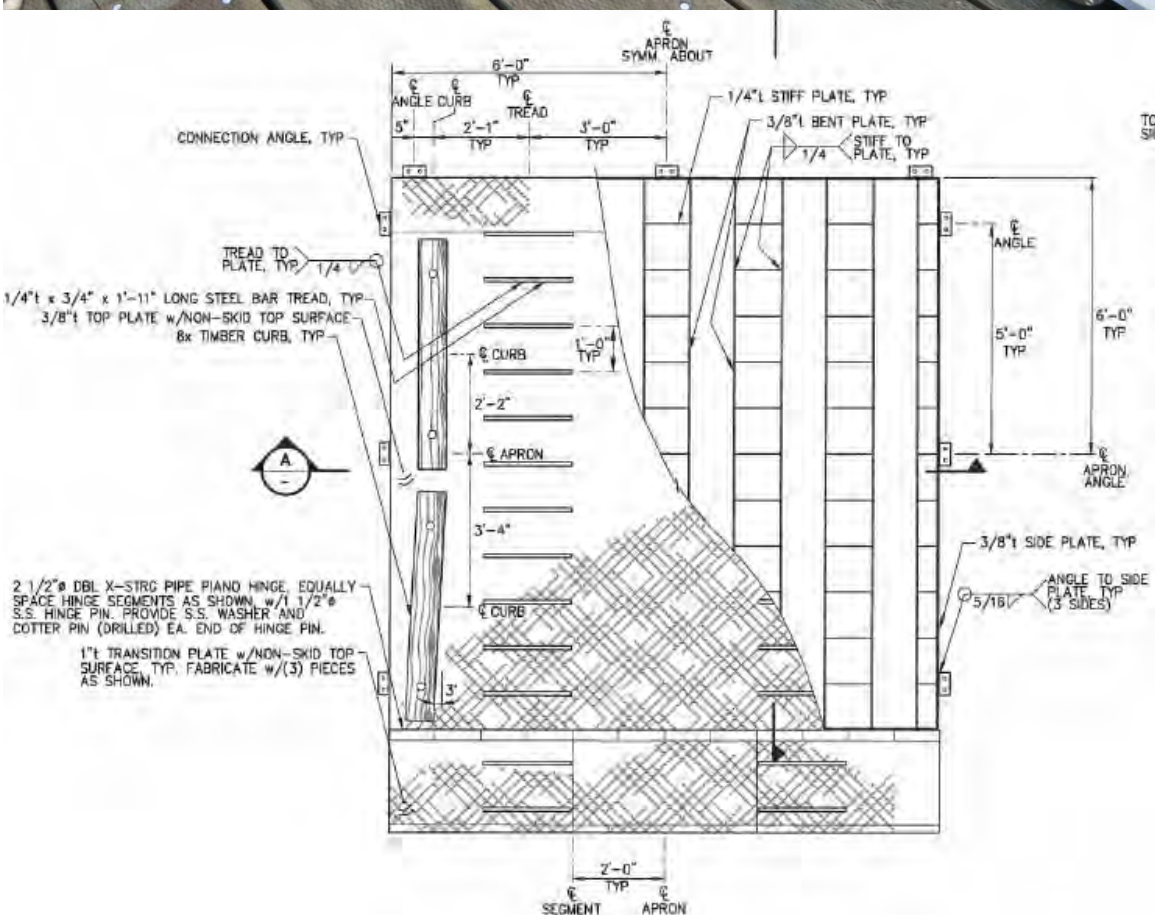

Figure 17: Transition apron details. The transition apron was constructed according to the plans, but was not secured into place at the time of the inspection.

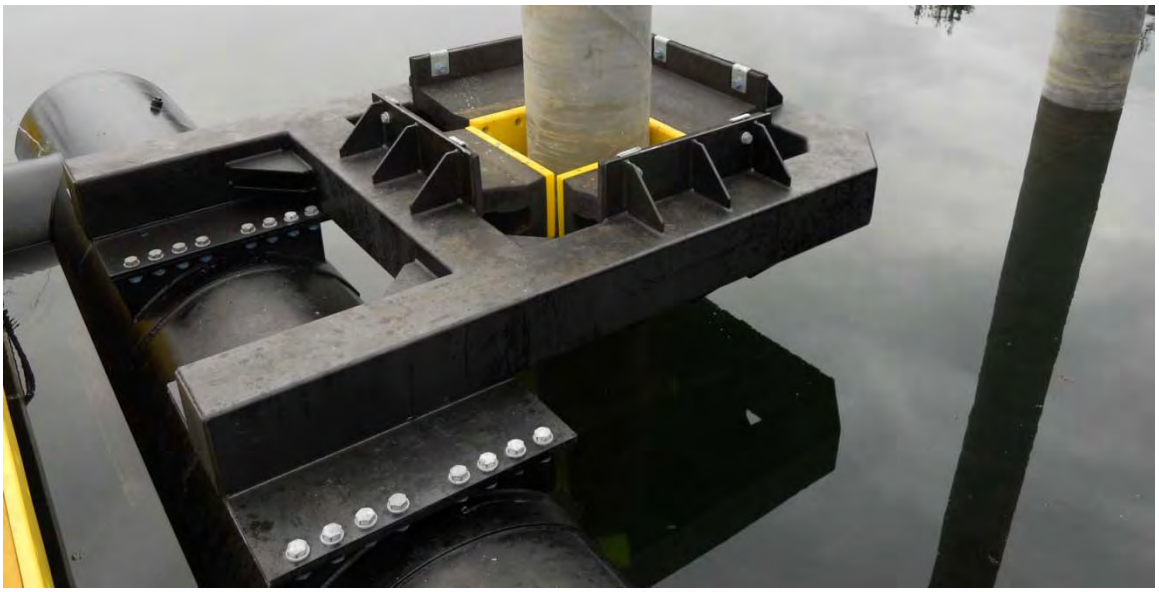

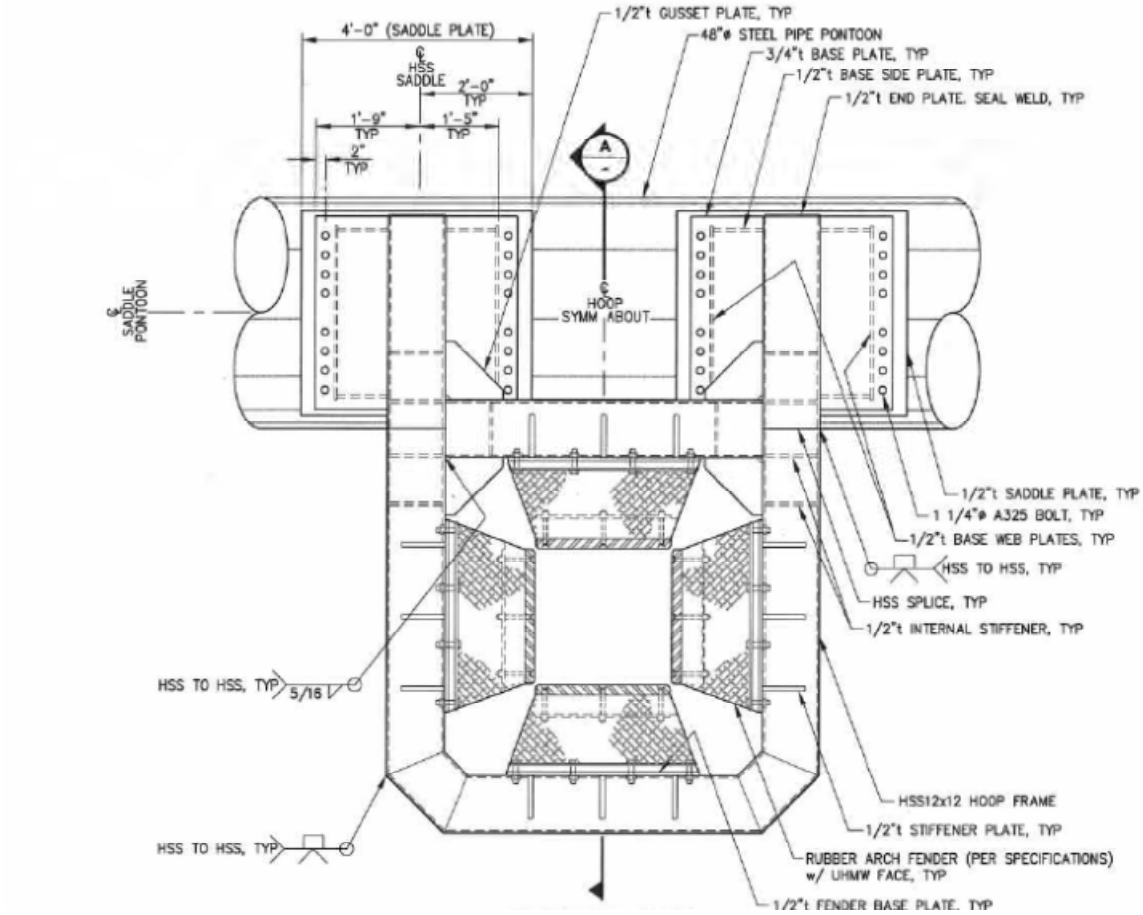

Figure 18: Pile hoop details. Note pile rubbing against the rub strips of the hoop in the photo. The team was informed that two of the piles rub against opposite ends of their respective hoops suggesting a pile may have been placed out of tolerance; however the issue was not considered to be severe and the team did not note any rub marks on the piles or wear of the rub strips at the time of inspection.

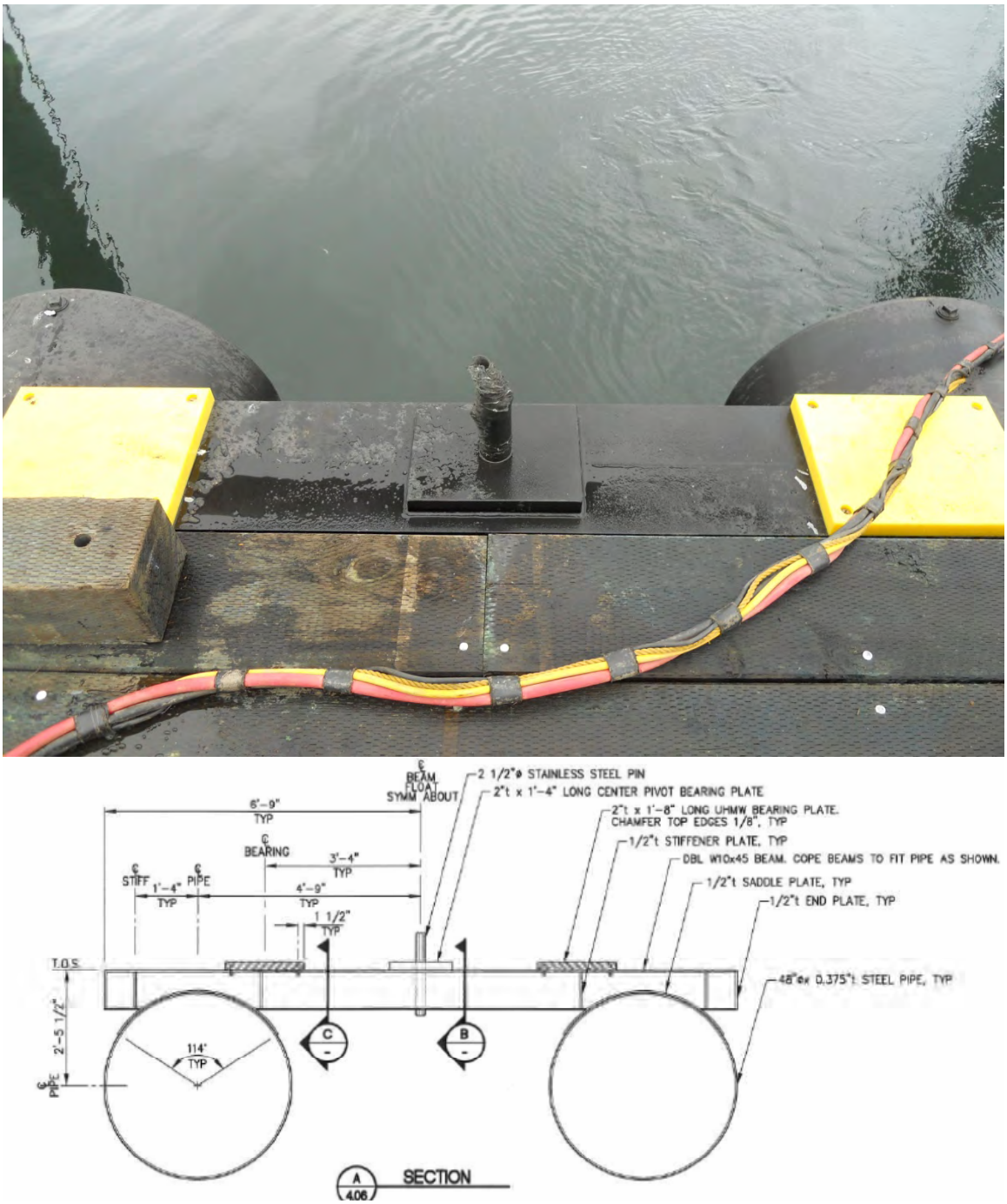

Figure 19: Seaplane float bridge connections. The drive down float included construction of all connection details associated with the seaplane float that were fastened to the drive down float. The center pin and slide pad arrangement is similar to the transfer bridge connection. The center pin is 2-1/2 inches in diameter whereas the pin at the transfer bridge is 4 inches in diameter.

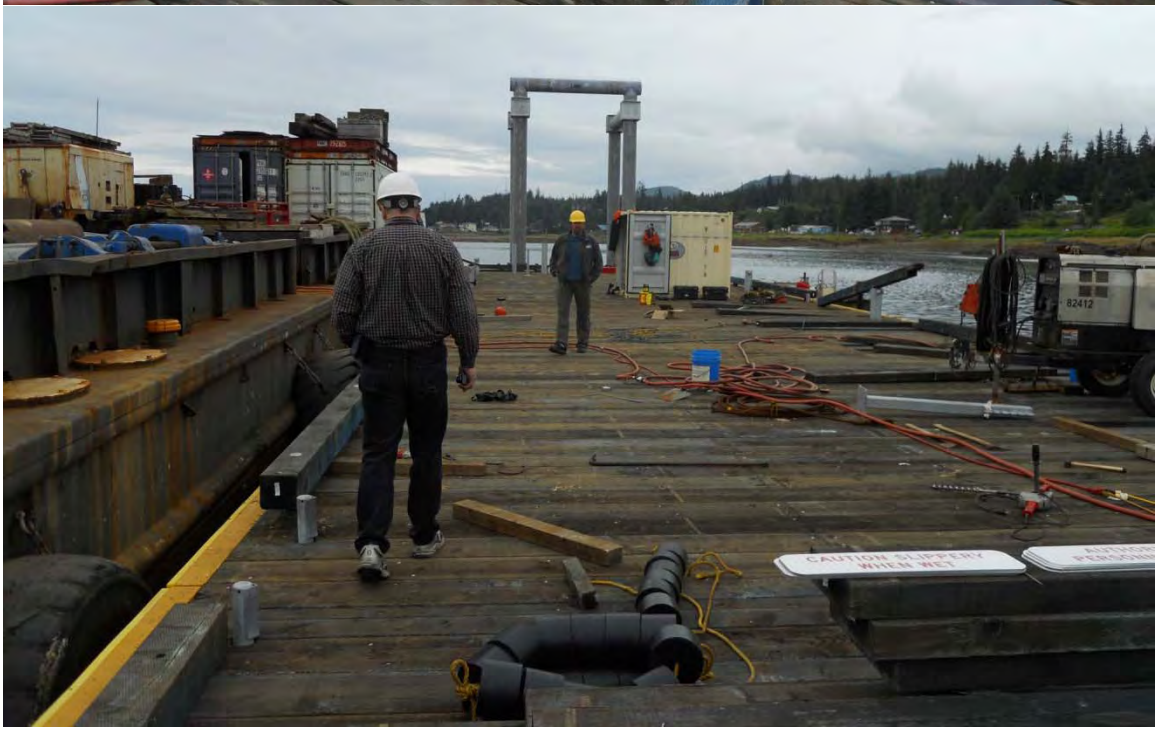

Figure 20: Final construction activities to complete the drive down float. Most of the remaining work was to fasten the decking and finish the bull rails.

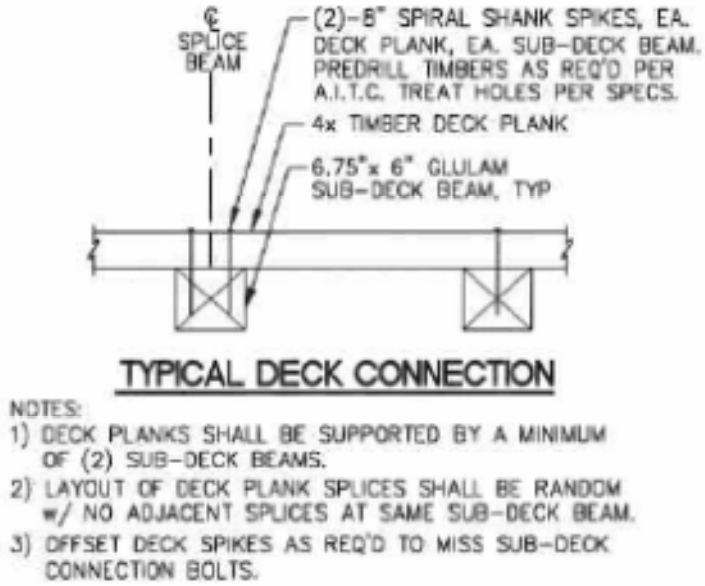

Figure 21: Deck fasteners. Deck planks were secured to the float with 8" galvanized spikes. Holes were predrilled into the planks and treated with wood preservative. Nails were set into the holes and driven with a pneumatic hammer.

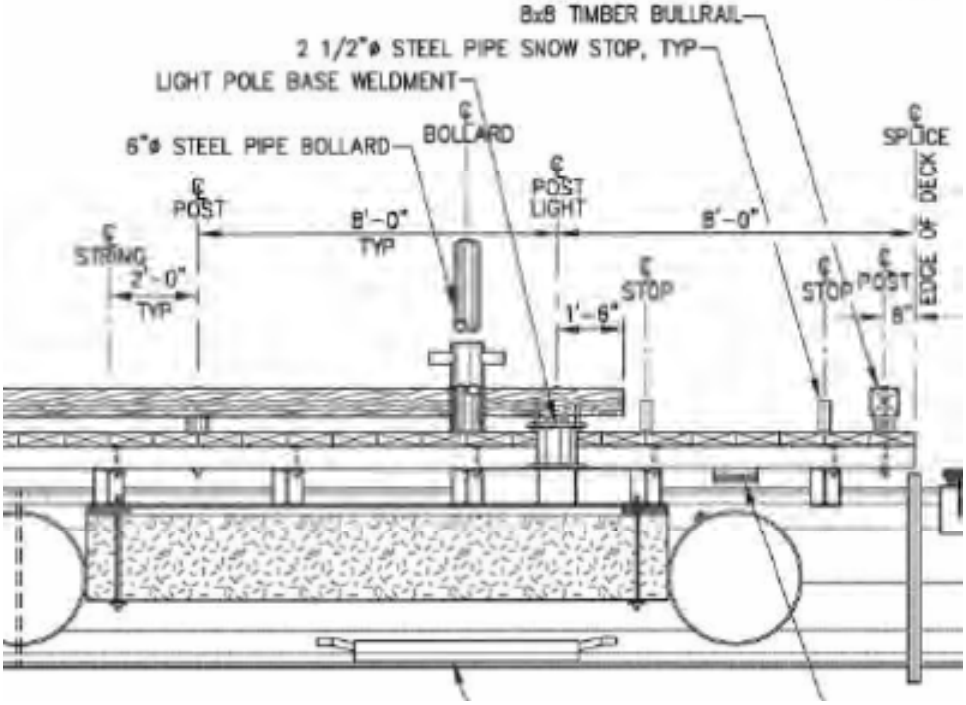

Figure 22: Breaks in the bull rail were provided to assist in snow removal. The short posts are snow stops which act as plow-catchers to prevent the plow vehicle from driving over the edge of the float.

Figure 23: life ring cabinet and fire extinguisher cabinet, typical. All sets of safety equipment were found on the float deck.

Figure 24: Mooring bollard photos, see Figure 25.

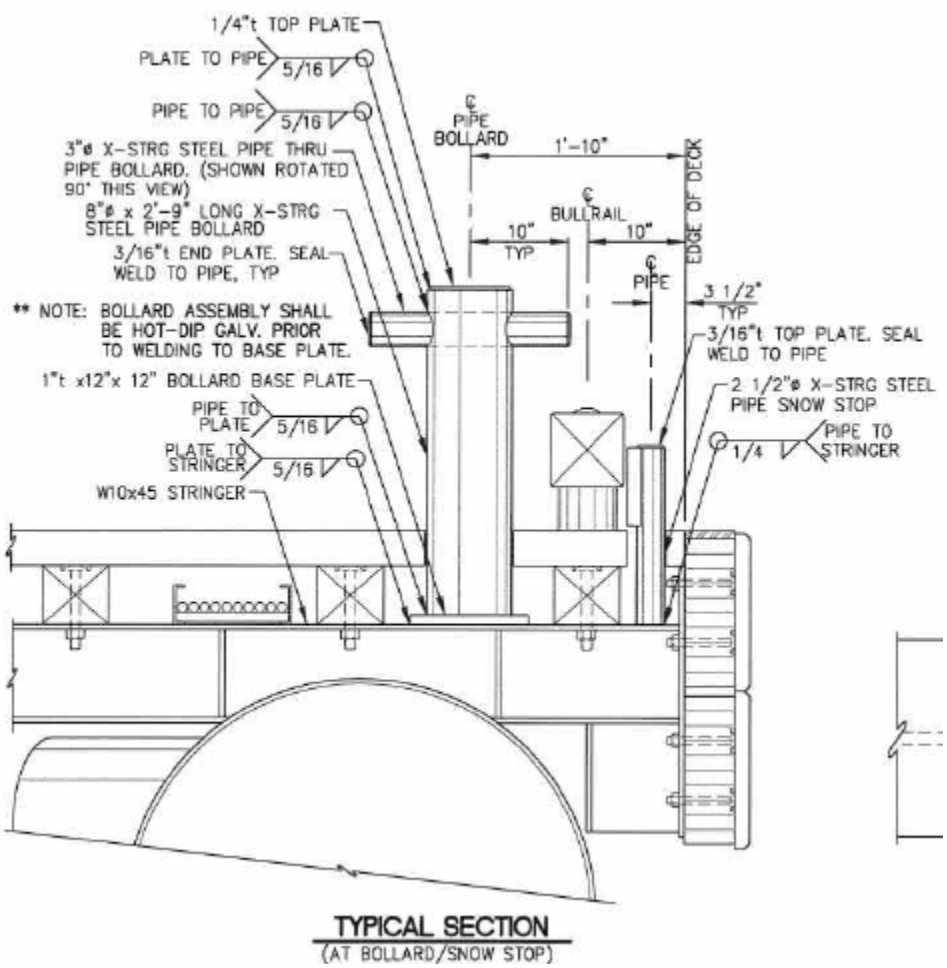

Figure 25: Mooring bollards were welded directly to the steel frame of the float. Photos showing execution of this detail are shown on the opposite page.