CONCEPT DESIGN REPORT AND

CONSTRUCTION COST ESTIMATE

FOR ENERGY PROJECTS

IN THE COMMUNITY OF:

ATMAUTLUAK

PREPARED FOR:

STATE OF ALASKA

ALASKA ENERGY AUTHORITY/ RURAL ENERGY GROUP

PREPARED BY:

Gray Stassel Engineering, Inc.

Mailing Address - P.O. Box 111405
Anchorage, AK 99511-1405
(907) 349-0100 349-8001 FAX

July 19, 2013

EXECUTIVE SUMMARY

This report has been prepared by Gray Stassel Engineering, Inc. (GSE) for the Alaska Energy Authority / Rural Energy Group (AEA/REG). The purpose of this study is to review the existing community of Atmautluak energy infrastructure and to propose energy project upgrades, electric distribution system improvements, and summarize a wind power generation study prepared by others. A concept design and construction cost estimate is included for the following energy projects for the community of Atmautluak:

- Diesel Power Plant Replacement.
- Diesel Generation Heat Recovery System.

Participants in the project include the Village of Atmautluak/Atmautluak Joint Utilities and Atmautluak Limited.

Site investigations were performed by Steve Stassel, Clois Versyp and Bill Price of GSE June 2 and 3, 2011 and August 15, 2011. The purpose of the site visits was to meet with local residents to discuss the scope of potential energy projects as well as to gather field data on existing energy infrastructure.

The existing Atmautluak power plant was constructed circa 1990; new generators and switchgear were installed in 2009. It contains a total of 3 diesel generators. At this time only 2 of the generators are functional. The site investigation identified that the building is in poor condition with a failing floor structure and in need of replacement.

The proposed new power plant site is adjacent to the existing power plant. The new plant will consist of a pre-fabricated steel module with a field installed roof system. The module will have a generation room which will contain four generators (2 new and 2 refurbished) and associated mechanical equipment, and a control room which will contain programmable automatic paralleling switchgear and SCADA equipment. Other features of the new plant include a fire suppression system, critical grade exhaust silencers, used oil blending, heat recovery, and wind power integration controls. The module will be operationally complete and shop-tested in Anchorage prior to shipment. Two existing 6081 John Deere generators will be refurbished and installed in the module after installation in Atmautluak.

The proposed heat recovery system will capture jacket water heat from the diesel generators using a heat exchanger. The new power plant will be capable of providing heat to the Community Hall, Limited Store, Bingo Hall, Post Office, and Washeteria. These community buildings are estimated to use 8605 gallons; of which the heat recovery system is estimated to offset up to approximately 8300. Alaska Native Tribal Health (ANTHC) has secured Rural Energy Fund grant funding to construct a heat recovery system to provide heat from the existing power plant to the existing washeteria. This study includes expanding the ANTHC heat recovery system to include the Community Hall, Limited Store, Bingo Hall and Post Office.

Power is currently generated at 480 volt, 3-phase, 4-wire and distributed at 12.47/7.2 kV 3-phase. The electric distribution system is a 12.47kV system

constructed in 2003 to RUS standards. The distribution poles are 35-foot, Class 4 poles through-bolted to 40-foot driven H10 steel piles. The piles are driven to approximately 35-foot depth and the pole bases are mounted approximately 1-foot above grade. Dead-end and angle structures are anchored using 35-foot driven H-piles. The overall condition of the distribution system appears good, with the exception of apparent frost jacking of some anchor piles. The operator logs and site visits indicate a significant load imbalance between phases. Recommendations include balancing the electric distribution system and installing helical anchors where anchor piles have jacked.

Atmautluak received separate Rural Energy Fund (REF) funding to complete a wind generation CDR. WH Pacific completed the wind CDR in 2013. Atmautluak is classified as a Class 4 wind regime and the Alaska Energy Authority has recommended installation of 2 turbines as part of a medium penetration wind generation system. The installation will include controls that are integrated with the diesel switchgear and an electric boiler to utilize excess power. The detailed description, analysis, and cost estimate for the wind generation system is included in a separate CDR.

The proposed energy projects schedule calls for design, permitting, and procurement of long lead items to occur late 2013. Fabrication and testing of the diesel power plant module will be done in the winter/spring of 2014, with mobilization and construction during the fall of 2014 through winter of 2015.

A summary of the estimated total costs, including all design, supervision, inspection, permitting, and a 15% contingency, are:

- $2,205,319 Diesel Power Plant
- $ 330,838 Heat Recovery Project*
- $ 84,946 Distribution System Maintenance
- **$2,621,103 Total Cost Proposed 2015 Energy Projects****

* Primary Heat Recovery to be constructed by ANTHC using separate funding source

** refer to separate Wind Power Generation CDR prepared by others for cost estimate

INDEX

Executive Summary ..... Page i
Index ..... Page iii
1.0 Introduction ..... Page 1
1.1 Program Overview ..... Page 1
1.2 Community Description ..... Page 1
1.3 Site Investigation ..... Page 2
1.4 Code Analysis & Deficiencies ..... Page 3
2.0 Existing Facilities ..... Page 4
2.1 Power Plant ..... Page 4
2.2 Power Distribution ..... Page 5
2.3 Fuel Storage ..... Page 6
2.4 Heat Recovery System ..... Page 7
3.0 Community Power Demand ..... Page 7
3.1 Estimated Future Load Growth ..... Page 7
3.2 Alternative Energy – Heat Recovery ..... Page 8
3.3 Alternative Energy – Wind Generation ..... Page 8
3.4 Alternative Energy - Efficiency Improvements ..... Page 8
4.0 Proposed Energy Infrastructure Project Descriptions ..... Page 9
4.1 Diesel Power Plant Replacement ..... Page 9
4.1.1 Generator Selection ..... Page 10
4.1.2 Switchgear & SCADA ..... Page 10
4.1.3 Power Plant Fuel System ..... Page 10
4.2 Diesel Generation Heat Recovery ..... Page 11
4.3 Distribution System Repair/Replacement ..... Page 12
4.4 Wind Generation ..... Page 12
5.0 Site Selection & Control ..... Page 13
5.1 Power Plant Site ..... Page 13
5.2 Heat Recovery System ..... Page 13
5.3 Power Distribution System Upgrade ..... Page 13
5.4 Wind Farm Site ..... Page 13
5.5 Site Control ..... Page 13
6.0 Permitting ..... Page 14
6.1 Environmental Assessment ..... Page 14
6.2 Fire Code ..... Page 14

6.3 Spill Response....Page 14
6.4 Air Quality Permit....Page 14
6.5 Power Plant Wetlands Permitting....Page 15
6.6 Wind Farm Project Permitting....Page 15
7.0 Construction Plan....Page 15
7.1 Local Job Skills....Page 16
7.2 Local Equipment....Page 16
7.3 Material Sources....Page 16
8.0 Schedule....Page 17
9.0 Cost Estimate....Page 17
Concept Design Drawings....Appendix A
Construction Cost Estimates....Appendix B
Site Control Documents....Appendix C
Electrical Load Data....Appendix D
Heat Recovery Worksheet and Graphs....Appendix E
Community Correspondence....Appendix F
Geotechnical Letter Report....Appendix G

1.0 INTRODUCTION

This report has been prepared by Gray Stassel Engineering, Inc. (GSE) for the Alaska Energy Authority / Rural Energy Group (AEA/REG). The purpose of this study is to review the existing community of Atmautluak energy infrastructure and to propose energy project upgrades. A concept design and construction cost estimate is included for the following energy projects:

- Diesel power plant replacement
- Heat recovery system

A cost estimate for recommended electric distribution system improvements is provided, and a wind power generation study prepared by others is summarized.

Participants in the project include the Native Village of Atmautluak and Atmautluak Limited.

1.1 Program Overview

The Alaska Energy Authority (AEA), Rural Energy Group is pursuing grant funds to upgrade electric power systems. All project components are dependent on available funding. Following is a brief outline of the program:

- The funding for the project is a combination of State and Federal grants. In order to receive grant funds, each community must demonstrate that the proposed facility will be sustainable by accepting a business plan. The business plan shall describe who will own the facility, and how it will be operated, maintained and replaced.
- New energy projects are funded, designed, and constructed in three phases: Phase 1, Conceptual Design; Phase 2, Design Completion; and Phase 3, Construction.
- During Phase 1, Conceptual Design, staff from AEA will visit a community, discuss the program, and work with residents and the local government to select sites for the new facilities.
- At the completion of Phase 1 Conceptual Design, the community will be requested to review and approve the location, capacity, and basic configuration of the facilities as well as a business plan.
- During Phase 2, Design Completion, the design for the new energy projects will be completed. An environmental assessment will be prepared and site control documented.
- Each community will be requested to provide “in kind” contributions as available.
- Training Available: AEA has several training programs available for communities.

1.2 Community Description

Atmautluak lies on the west bank of the Pitmiktakik River in the Yukon-Kuskokwim Delta, 20 miles northwest of Bethel. It lies at approximately 60.866940 North Latitude and -162.273060 West Longitude. (Sec. 19, T009N,

R074W, Seward Meridian.) Atmautluak is located in the Bethel Recording District. The area averages 16 inches of precipitation, with snowfall of 50 inches. Average summer temperatures range from 62 to 42 °F, and average winter temperatures range from 19 to -2 °F. The population was estimated at 277 residents in 2010. Atmautluak is an unincorporated community located in the Bethel Recording District, the Lower Kuskokwim School District and the Calista Corporation. It is not within an organized borough.

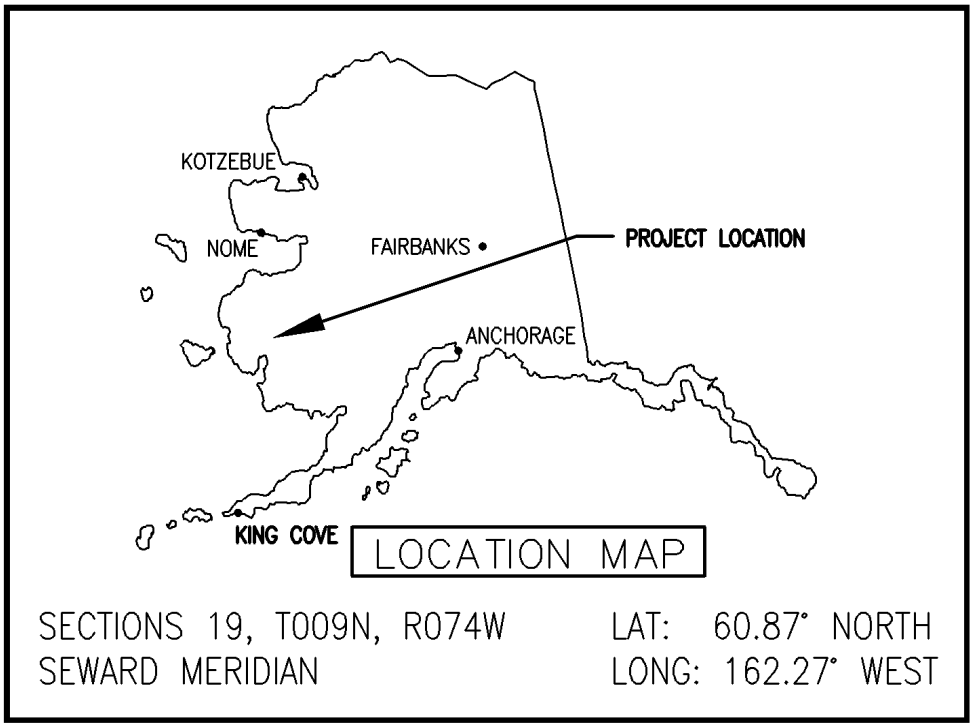

1.3 Site Investigation

Site investigations were performed by Steve Stassel, Clois Versyp and Bill Price of GSE June 2 and 3, 2011 and August 15, 2011. The purpose of the site visits was to meet with local residents to discuss the scope of potential energy projects as well as to gather field data on existing energy infrastructure. In addition to the data gathered during the site visit, available information was obtained and analyzed from the following sources:

- Atmautluak Wind-Diesel Power System Conceptual Design Report, WHPacific, 2013
- Atmautluak Washeteria Heat Recovery Project, Atmautluak Traditional Council, Alaska Renewable Energy Fund Application, Round 6.
- Alaska Energy Authority Village Power System Assessment, 2012
- Atmautluak Draft Power Plant and Condition Survey Report, Alaska Energy and Engineering, Inc. , 2011

- Atmautluak Power Cost Equalization (PCE) Data, 2012
- Atmautluak Electrical Distribution System Upgrade, Conceptual Design Report, LCMF Incorporated, 2002
- Site Control Status Report and Action Plan, Rick Elliot, 2002
- Atmautluak Geotechnical Investigation, Duane Miller & Associates, 1996
- Atmautluak Sanitation Facilities Construction Plans, Washeteria, Lift Station and Force Main, Phase 2 AS-BUILT, Project # AN-92-085 ANTHC, 1995
- Atmautluak WTP/Washeteria Sewer Improvements, Project # AN-04-N85, ANTHC, 2012
- Atmautluak Traditional Council Power Plant and LKSD School Fuel System Upgrade, LCMF, 1997
- State of Alaska, Dept. of Community & Regional Affairs (DCRA) Community Profile & Map, Corps of Engineers wetlands and flood information, various survey plats and other relevant data.

Additional information and input was obtained from the following individuals:

- Lillian Pavilla, Atmautluak Limited Manager, Atmautluak, 907-553-5428
- Author Dull, Atmautluak Joint Utilities Manager, Atmautluak, 907-553-5429
- Peter Nicholai, Village of Atmautluak Administrator, Atmautluak, 907-553-5610
- John Hutchinson, Project Manager, ANTHC, 907-729-3723
- Rick Elliot, Land Consultant, (907) 868-4043

1.4 Code Analysis & Deficiencies

The following is a summary of existing power plant code analysis and deficiencies observed during the site investigations.

- Existing power plant subfloor inadequate and corroded, allowing excessive vibration and potential failure of floor supporting gensets.
- Primary gensets are due for major overhaul; the secondary genset is undersized and inoperable.
- Power plant roof leaks
- No operational fire suppression system
- Multiple distribution poles guy wires are loose and require adjustment

The concept design for all energy projects have been prepared to meet current code and regulatory requirements, which include:

- The 2009 Edition of the International Building Code (IBC).
- The 2009 Edition of the International Fire Code (IFC) and currently adopted Alaska State Fire Marshal Fire and Safety Regulations.
- The 2011 Edition of the National Electrical Code (NEC).

- The 2007 Edition of the National Electrical Safety Code (NESC).
- 40 CFR, Part 112.1-12, U.S. Environmental Protection Agency Spill Prevention Requirements

2.0 EXISTING FACILITIES

The existing power plant and electrical distribution system were visually examined to determine suitability for re-use. The following paragraphs summarize findings for the community.

2.1 Power Plant

The existing diesel power plant is located near the center of the community about 400-feet northwest of the community building and store. The power plant was constructed circa-1990 and is a pre-engineered metal building set on steel I-beam skids and supported on an I-beam and pile foundation. There are six 8-inch round piles that stand approximately 24-inches above grade. Attached to the top of the piles is a 30-foot x 19.5-foot rectangular structure fabricated of 12-inch wide flange beams. The 12-inch power plant skids are secured to the top of the rectangular steel structure.

The power plant exterior dimensions are approximately 32-feet by 20-feet. The building exterior is metal siding, and the interior walls are furred out 8-feet high with plywood and FRP panel. The exterior siding appears to be in relatively good condition, with minimal signs of corrosion or external damage.

The power plant was renovated in 2009. The scope of the project included installation of 3 new gensets with charge air coolers, new automatic start/stop, paralleling and load sharing switchgear, and minor upgrades to existing mechanical and electrical systems. The diesel gensets operate at 480 volt, three-phase, grounded wye. During site visits, power plant floor was clean, the area well lighted, and engines clean.

Power Plant Generation Equipment

Unit #	Make / Model	RPM	kW	Tier
1	John Deere G6081HF070	1800	210	2
2	John Deere G6081HF070	1800	210	2
3	John Deere G4045HF485	1800	120	3

Genset Hours as of October 24, 2012

Unit #	Serial Number	Hrs
1	RG6081H296693	12,907
2	RG6081H296672	14,984
3	PE4045L071908	316

The building exterior and pile foundation appear sound; however, the roof leaks and the power plant floor is failing. During the site visit the weather was fairly dry and no noticeable water was leaking into the plant; however, in two areas along the roof eave water damage was apparent, and the plant operator had installed plastic sheeting above the switchgear to prevent water from dripping onto the gear.

The power plant floor appears to be fabricated of 2x dimensional lumber covered with plywood and supported on a light gauge (approximately 1/16" thick) galvanized steel channel system comprised of interlocking sections 6-inches tall by 9.5-inches wide that span the full 20-foot width of the power plant floor. The result is that the power plant floor is only supported by sixty 1/16" thick by 6-inch tall galvanized steel webs, with between 3 and 6 linear inches of webbing bearing on each skid. Where the floor loading is low (at the south end of the building), the webbing appears to be fairly straight. However, at the genset end of the building, where the highest loads and vibrations occur, the webbing is both buckling at the connection to the skid as well as deflecting (sagging) 1 to 2-inches mid-span between the skids. The galvanized coating is damaged at each welded connection to the steel skid and the webbing is corroding and failing. In order to repair the floor structure the entire plant would need to be demolished; therefore, replacement with a new structure is required.

2.2 Power Distribution

The electric distribution system is a 12.47kV system constructed in 2003 to RUS standards. The distribution poles are 35-foot, Class 4 poles through-bolted to 40-foot driven H10 steel piles. The piles are driven to approximately 35-foot depth and the pole bases are mounted approximately 1-foot above grade. Dead-end and angle structures are anchored using 35-foot driven H-piles. The overall condition of the distribution system appears good.

Onsite Inspection was limited to visual observation from the ground of aerial hardware and inspection of pole/pile attachments and guy wire tension. Distribution poles were vertical with no apparent leaning or frost-jacking of the piles. Aerial hardware appeared to be in good condition and conductors properly tensioned. All pile bolts were checked and hand-tightened to a dead-hard condition. Most bolts required between ½ to 1-full turns to tighten, while a few required 1.5 to 2-turns to fully tighten.

It was noted that many of the pole anchors shown on the design drawings were not installed. This appears to be due to minor adjustments in the alignment during construction to alleviate angle points, as well as elimination of many anchors dedicated solely to service drops. In addition to missing anchors, many of the anchor guy wires were loose. It is possible that some anchor piles may have frost jacked; however, this is unexpected based on the design data. The design indicates that the anchor piles are driven 34-feet into the ground with 1-foot extending above grade. This is essentially the same embedment depth as the pole piles none of which exhibit evidence of frost jacking.

The AEA Village Power System Assessment recorded an imbalance greater than 25% during Sept 2012. In the operator logs for September and October 2012 a

significant imbalance between the amperage loads on each phase was also recorded. Operator Log data was compiled into the following charts to illustrate the load imbalance.

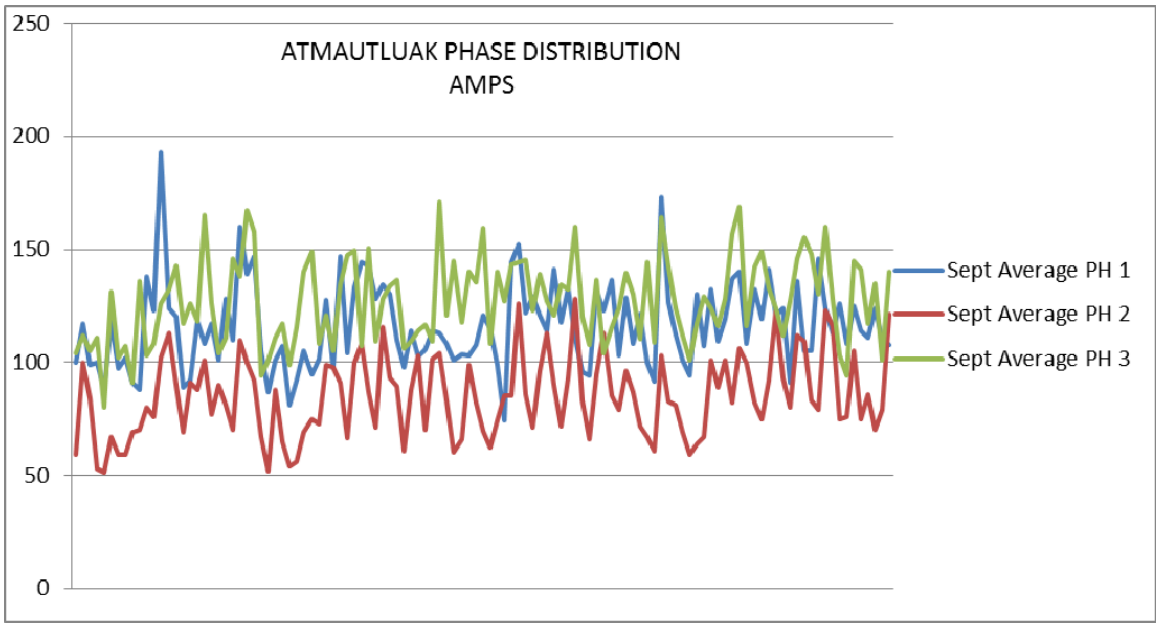

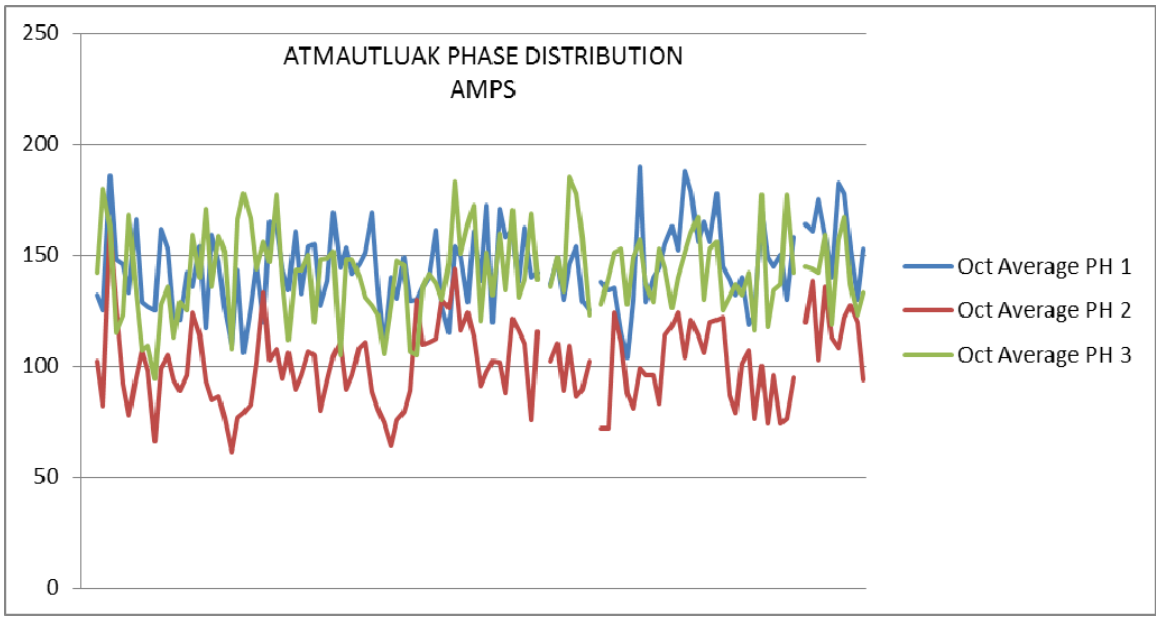

The data was collected by power plant operators each day in the morning, lunch, afternoon and evening. Additionally, the data collected above does not indicate if the school was self-generating or connected to the village utility grid.

2.3 Fuel Storage

The Atmautluak tank farm is located near the power plant site and provides bulk storage for virtually all gasoline and diesel fuel used in Atmautluak, including community power generation. The tank farm was constructed in 1998 and appears to be in good condition. It consists of a welded structural steel dike supported above grade on steel piles, enclosed by a chainlink fence with

barbwire top. The dike contains 18 fuel tanks; including nine LKSD school diesel fuel tanks, two gasoline and five diesel Traditional Council Store storage and dispensing tanks, and two Utility diesel fuel tanks. The facility provides tank capacity of approximately 70,000 gallons for LKSD diesel fuel; Store capacity of 20,000 gallons gasoline and 46,900 gallons diesel fuel, and 48,000 gallons of Utility diesel fuel. The tank farm is a code compliant facility. The LKSD tank capacity provides about a two-year supply of fuel for the school. In recent years, the Utility has consumed approximately 55,000 gallons/year, which requires receiving a fuel delivery in the spring and then topping off the tanks in late fall. The Store reports that 6000 gallons of diesel fuel was purchased from LKSD this past winter, and that a new 10,000 gallon fuel tank is onsite but has not yet been installed. There appears to be adequate space in the existing dike to install either one horizontal 10,000 gallon tank or possibly two vertical 10,000 gallon tanks.

2.4 Heat Recovery System

Atmautluak does not currently utilize available heat from the diesel generators. ANTHC has been awarded funding through the Alaska Renewable Energy Fund (REF) to install heat recovery piping between the existing power plant and the washeteria. Construction is estimated to begin in 2014.

3.0 COMMUNITY POWER DEMAND

According to a review of PCE load data AJU power generation in FY2012 was 746,011 kWh. However, according to both AJU and LKSD, the school self-generated a portion of its own power during the latter part of 2012, as well as into 2013. Averaging PCE over the past data several years yields an annual power generation of 730,000 kWh, with fuel consumption of approximately 55,000 gallons, the existing power plant operates at an efficiency of 13.3 kWh/gal. The average demand is 83 kW, with peaks ranging from near 200 kW (including estimated peak LKSD school load of 75kW) during winter to 54 kW during summer. With the new power plant online, AJU will be able to reliably meet all of the community's and LKSD school's electric demand.

PCE power consumption data was obtained for FY2008 through Jan 2013. This data is included in Appendix D.

3.1 Estimated Future Load Growth

It is important to evaluate the impact of planned infrastructure improvement projects on an existing power generation system. New construction and other community improvements can adversely impact the adequacy of existing facilities.

The population has varied from 258 in 1990, 294 in 2000 and 277 in 2010. Planned construction projects include the replacement of the existing tram system, flush and haul system upgrade completion, boardwalk upgrades, and new well and sewer system upgrades. The electrical loads will likely see minimal increases in yearly usage and peak loads as the population fluctuates and facilities are upgraded.

3.2 Alternative Energy – Heat Recovery

Atmautluak is considered a good candidate for a Heat Recovery project due to the near proximity of several suitable public buildings to the power plant site. The existing power plant generators are equipped with dry-exhaust manifolds which are capable of meeting the majority of the heating load of the Washeteria. Two of the new power plant module gensets will be equipped with wet-exhaust (marine jacketed) manifolds. With the use of marine jacketed generators, the heat available increases significantly, and the Community Hall, Limited Store, Bingo Hall, and Post Office become viable candidates for recovered heat.

Installation of wind turbines in Atmautluak will reduce the power produced by diesel generators, and therefore heat available from the diesel generators. The final heat recovery numbers will be reviewed and updated upon completion of the Wind CDR. In the event that wind power generation is installed, an electric boiler with wind turbine frequency control capability will be installed in the school or the district heating loop. This boiler will allow excess wind power generation (above community demand) to displace diesel fuel used for building space heat.

The following table details the buildings currently being considered, and their respective heat loads with the estimated heating fuel offset.

Heat Recovery Estimate

Building	Fuel Usage (gal)	Fuel Offset (gal)
Utility Warehouse (former pp)	500	482
Community Hall	1200	1156
Limited Store (inc. warehouse)	1300	1253
Bingo Hall Post Office	1050	1012
Washeteria	4555	4389
Total	**8605**	**8292**

Analysis of a potential heat recovery project is included in Appendix E. The proposed system is described Section 4.2.

3.3 Alternative Energy – Wind Generation

The Atmautluak Tribal Council applied for funding through the Renewable Energy Fund (REF) Round IV for design and permitting of a wind energy project in Atmautluak. This application utilized a Feasibility Study conducted by WHPacific in 2010, and updated in 2013. The report is in final review by AEA. The report is expected to recommend two 95 kW wind turbines. The proposed system is briefly described in Section 4.4.

3.4 Alternative Energy - Efficiency Improvements

Careful sizing and selection of new generators with advanced technology in conjunction with the installation of new fully automatic paralleling switchgear and

a continuous off-line engine preheat system will maximize the fuel efficiency of the new diesel power plant.

With the exception of the previously mentioned systems, there are no other known practical alternative energy sources currently available at Atmautluak. At this time it appears that supplemental wind generation, heat recovery, and possibly additional end-use conservation are the only viable fuel-saving technologies available for Atmautluak.

4.0 PROPOSED ENERGY INFRASTRUCTURE PROJECT DESCRIPTIONS

The following proposed facility descriptions are separated into four sections:

- Section 4.1, "Diesel Power Plant Replacement" describes the proposed construction of a new modular diesel power plant and switchgear controls.
- Section 4.2, "Diesel Generation Heat Recovery System", describes a Heat Recovery project serving the washeteria and other community buildings in the vicinity of the new diesel power plant.
- Section 4.3, "Distribution System Maintenance", describes proposed adjustment and repairs to the existing power distribution system.
- Section 4.4, "Wind Generation", provides a summary of the WHPacific wind CDR study currently in process.

4.1 Diesel Power Plant Replacement

The Village of Atmautluak diesel power plant is the primary source of power generation for the community and it will continue to provide prime power even if wind or other alternative energy projects are developed. Due to the age and condition of the existing facility the power plant is in need of complete replacement. Keeping the existing plant on-line during installation of the new power plant will provide power to the community during construction and will eliminate the project cost of providing temporary power. Locating the new power plant in the same general vicinity as the old plant will simplify the new distribution feeder connections and maintain close proximity to public buildings deemed suitable for heat recovery.

The proposed location for the new modular power plant is approximately 25 feet southwest of the existing power plant. The structure will be a prefabricated insulated steel module measuring approximately 16’ by 44’ with a field installed roof system. It will be supported on minimum 44’ long driven steel H-piles with thermosyphons for passive soil cooling. The module will have a generation room which will contain four generators and associated mechanical equipment and a control room which will contain programmable automatic paralleling switchgear and SCADA equipment. Other features of the new plant include a fire suppression system, critical grade exhaust silencers, heat recovery, used oil blending, heat recovery, and wind power integration controls. All systems will be operationally complete and shop-tested in Anchorage prior to shipment. The modular power plant layout is shown on drawings M3.1 and M3.2 in Appendix A.

4.1.1 Generator Selection

Proper sizing and selection of diesel generators is critical to meeting community electric loads while minimizing fuel consumption. To efficiently meet the existing electric demand, optimize integration of wind power, and maximize recovered heat availability, the new diesel power plant will be equipped with two new John Deere model 6090AFM75 Tier 2 marine diesel generators. The engines are rated 210kW electrical prime power and provide good fuel efficiency. In addition, the marine configuration provides nearly three times the jacket water heat available for heat recovery compared to dry-exhaust engines. The existing 6081HF070 gensets will be refurbished and installed in the new power plant in the field. Although equipped with dry-exhaust, the 6081 gensets provide optimum fuel economy when recovered heat is not required and will be used during spring and summer months when there is minimal heating load.

4.1.2 Switchgear & SCADA

The new switchgear will have a total of 6 sections - one for each diesel generator; one for master control and metering; and one the distribution feeder breaker, which will also house the radiator variable frequency drive controllers, the station service breaker, and the electric boiler breaker. The switchgear will be fully automatic with paralleling capability and will utilize a programmable logic controller (PLC) to automatically match the running generator(s) to the community load, including monitoring the wind generation.

The new switchgear will include a SCADA system for remote generation and distribution monitoring. A desktop PC will be provided in the new plant control room to allow operator access and control of the different systems. Should the wind project move forward, a fiber optic data communication cable from the wind turbine to the power plant will allow monitoring and control of the remote wind turbine.

The new switchgear will provide automatic paralleling and load control of the four generating units. The load control system will monitor the electrical demand on the generators along with wind generation output and automatically select the number of generating units required to meet the demand. The switchgear will automatically start the most suitable engine, bring it up to speed, automatically synchronize the unit, and close the engine circuit breaker. When a unit is taken off line, either for maintenance or due to a reduction in electric load, the switchgear will automatically remove the unit from the bus and allow the engine to cool down before shutdown. Generator controls and relaying will provide complete protection and monitoring of each engine-generator and the distribution feeder.

4.1.3 Power Plant Fuel System

The Utility fuel capacity of 48,000 gallons provides slightly less than a full year's fuel supply. Fuel requirements are met by receiving a spring fuel delivery and then filling the tanks in late fall. The Store diesel fuel tank system is equipped with piping and a meter to support transferring diesel fuel from the Store into the

Utility tanks, should the Utility require additional diesel fuel prior to the spring barge delivery.

The average daily use for the highest electric production month during the winter is 200 gallons/day. A new automatic fill 160 gallon fuel oil day tank will be installed inside the module. It will be equipped with a gear pump, redundant overfill protection and alarm systems, a hand priming pump, and a totalizing meter. The existing diesel fuel transfer piping solenoid valve located in the tank farm will be replaced with a new actuated ball valve. The plant will also be equipped with a used oil blending system. Used engine oil will be pumped into a hopper during oil changes. Each time the day tank fills the system will filter and blend used oil with diesel fuel a ratio of 0.5% of used oil to diesel fuel.

All fuel and oil piping will be schedule 80 steel with welded or threaded joints. Each isolated section of piping will be provided with pressure relieving devices to account for thermal expansion of product caused by temperature fluctuations. Provisions for movement of the piping caused by thermal expansion and contraction will be included. All valves will be steel body industrial grade valves intended for use with fuels.

4.2 Diesel Generation Heat Recovery

An analysis of available diesel heat recovery using the existing diesel generators as well as the proposed new generators was conducted. The Washeteria, Limited Store, Community Hall, Bingo Hall, and the old power plant are estimated to use 8605 gallons of diesel annually for space and water heating. See the table in Section 3.2 for a breakdown of each buildings fuel usage. The results are included in Appendix E.

Alaska Native Tribal Health (ANTHC) has secured Rural Energy Fund grant funding to construct a heat recovery system to provide heat from the existing power plant to the existing washeteria. This study includes expanding the ANTHC heat recovery system to include the Community Hall, Limited Store, Bingo Hall and Post Office. The proposed expanded heat recovery project consists of the following components:

- Tying the new power plant module into the existing power plant and installing approximately 400 lineal feet of 2-inch pre-insulated arctic pipe to expand the ANTHC funded project.
- Installing a recovered heat BTU energy meter at the Limited Store.
- Providing heat exchangers/unit heaters and associated equipment in each end-user building.

An overall area site plan showing the proposed heat recovery pipeline routing is shown on drawing M1.1 and M1.2 in Appendix A.

Based on the analysis in Appendix E, by incorporating the marine jacketed engines in the new power plant, it appears that the expanded heat recovery system can displace nearly all of the diesel fuel for heating the connected community buildings.

4.3 Distribution System Maintenance/Repair

The Atmautluak overhead electric distribution system was constructed in 2003 using H-pile supported foundations. With the exception of several loose guy wires, the distribution system appears to be in good operating condition. The new power plant module will be interconnected to the existing distribution system. H-pile anchors that are frost-jacking will be replaced with helical screw anchor piles and the electric distribution system will be electrically phase-balanced.

4.4 Wind Generation

WHPacific has prepared a Wind Energy CDR on behalf of Atmautluak Limited, Should the Wind Generation project be advanced, it will be integrated with the RPSU project. The detailed description, analysis, and cost estimate for the wind generation system is included in a separate CDR. A summary of the findings and recommendations are discussed below:

- Atmautluak has a Class 4 (good) wind regime and is a candidate for a wind generation project.
- The recommended turbines have a capacity of approximately 95kW each. Turbines will be installed on a monopole tower. Preliminary geotechnical investigations indicate the foundation would be supported on driven H-piles.
- An electric boiler will be installed in the power plant module to utilize excess power and improve power quality during periods of high wind output. The electric boiler will also act as a secondary dump load when the wind output exceeds the electrical demand, and excess electric power can be utilized in the heat recovery system.
- The diesel power plant switchgear will communicate with the wind turbine controller via a fiber optic cable. The diesel switchgear will act as the master controller to coordinate the system for optimum efficiency. The proposed system will always require diesel generation to maintain frequency. The controls will maximize wind power use to offset diesel generation. Excess wind power will be used for space heat.
- Based on the WHPacific study, the installation of 2 Windmatic WM 17 S turbines would generate approximately 311,000 kWh per year, offsetting diesel generation fuel consumption by more than 15,000 gallons per year. In addition, the wind project is estimated to produce excess power that can be used for building space heat equivalent to approximately 4400 gallons.

5.0 SITE SELECTION & CONTROL

Work for this project will be performed in four general areas as described in the following sections:

- (5.1) “Power Plant Site”
- (5.2) “Heat Recovery System”
- (5.3) “Power Distribution System”
- (5.4) "Future Wind Farm Site"
- New buildings will be constructed at or above the recommended building elevation per the US Corps of Engineers (COE). See Appendix C for the COE flood elevation numbers and preliminary site control opinion.

5.1 Power Plant Site

The proposed new power plant will be located southwest of the existing power plant on Atmautluak Limited property.

5.2 Heat Recovery System

The proposed Heat Recovery pipeline mains will be routed across Atmautluak Limited property and within utility easements between the power plant and the washeteria. Work will also be performed inside Village Council and Atmautluak Limited end-user buildings. Heat recovery piping will be routed adjacent too and supported by the sewer pipe helical supports and will parallel existing boardwalks where practicable.

5.3 Power Distribution System Upgrade

All distribution work will occur along the existing electric distribution alignment.

5.4 Wind Farm Site

The community’s preferred wind turbine site, “Site 1”, is located about 0.45 miles northwest of the Atmautluak power plant, and about 800 feet northwest of where the met tower was installed between 2005 and 2006. The site is located entirely on land owned by Atmautluak Limited, the local village corporation. Location (NAD83): 60° 51.728’ N, 162° 17.225’ W.

The alternate site is located entirely on land owned by Atmautluak Limited, the local village corporation. A particularly marshy area exists between the existing boardwalk/power line/homes and this site. After freezeup, this area is more heavily used than the preferred wind turbine site. Location (NAD83): 60° 51.229’ N, 162° 17.102’ W

5.4 Site Control

A sight control opinion letter was written on October 30, 2012. A copy of the letter is included in Appendix C.

Both the proposed new and existing power plant sites are vested in Atmautluak Limited.

The proposed heat recovery system areas are vested in the Village of Atmautluak and Atmautluak Limited.

The power distribution system is fully constructed, and maintenance work will be on existing poles and guy wires along the existing utility easement alignment.

The proposed wind farm site is located on land owned by Atmautluak Limited.

A long term lease agreement for the power plant site, and an easement for the heat recovery arctic piping alignment is needed between Atmautluak Limited and Atmautluak Joint Utilities. A draft power plant lease agreement and heat recovery piping easement will be prepared and submitted to both parties for review, approval and signature. The fully executed documents will be recorded in the Kuskokwim recording district.

6.0 PERMITTING

The proposed projects are subject to regulations of State and Federal agencies including the Alaska Department of Environmental Conservation (ADEC), the Division of Fire Prevention, Federal Aviation Administration, U.S. Fish and Wildlife Service, U.S. Corps of Engineers, and the U.S. Environmental Protection Agency.

6.1 Environmental Assessment

An Environmental Assessment (EA) will be completed prior to construction of the proposed projects. An EA is required for all projects that are federally funded or require a federal permit (such as a Corps of Engineers Wetlands Permit). The EA determines whether there is a significant impact to the environment caused by the project.

6.2 Fire Code

A Plan Review permit from the State Fire Marshal is required for the proposed diesel generation project. Final stamped design drawings will be submitted to the Fire Marshal for review prior to construction. Plans will be reviewed for conformance with the International Fire Code and related codes including the International Building Code and the National Electrical Code. The review process typically takes 3 to 6 weeks.

6.3 Spill Response

The existing power plant fuel oil storage tank capacity is in excess of 1,320 gallons and subject to U.S. Environmental Protection Agency regulations. The existing AJU Spill Prevention Control and Countermeasures (SPCC) plan will be revised and updated as part of this project.

6.4 Air Quality Permit

The ADEC requires diesel-electric power generation facilities to comply with 18AAC50 Air Quality Control requirements. A “Preapproved Emissions Limit” is available for those facilities which have the potential to emit in excess of 100 tons/year of nitrates (NOx), but that actually consume less than 330,900 gallons

of diesel fuel per year. Per ADEC regulations (18 AAC 50.250), a facility has the potential to emit 100-tons of NOx per year if the total installed diesel engine capacity exceeds 736 horsepower (approximately 515 kW electric output). A Preapproved Emissions Limit (PAEL) is a streamlined method of documenting compliance with ADEC Air Quality requirements, and consists of a 3-page application and annual fuel consumption reporting.

The new power plant will have a total diesel engine capacity greater than 736 horsepower, but consume less than 330,900 gallons/year. Therefore, the new power plant will be eligible to operate under the requested Preapproved Emissions Limit.

Atmautluak Joint Utilities received its Certificate of Public Convenience and Necessity (No. 337) on June 25, 1985. AJU does not currently have an existing PAEL for the electric utility. A PAEL application will be completed and provided for AJU to submit to ADEC.

6.5 Power Plant Wetlands Permitting

The power plant site is a wetland area and construction of the power plant foundation will require a Corps of Engineers Department of the Army Wetlands permit. It is anticipated the project will be eligible under either Nationwide Permit # 12 (Utility Line Activities) or #18 (Minor Discharges).

6.6 Wind Farm Project Permitting

The wind farm portion of this project requires approval by the Federal Aviation Administration (FAA) and review by the U.S. Fish and Wildlife Service (USFW). An FAA Aeronautical Study will be completed that authorizes construction. The Alaska State Historic Preservation Officer (SHPO) and the USFW will be consulted on the wind farm project. Further consultation with the agencies will be conducted to ensure the project complies with state and federal requirements.

7.0 CONSTRUCTION PLAN

The AEA/REG has a history of administering similar projects on a "modified" force-account basis. Force-account construction involves the owner or grantee acting as the employer and utilizing primarily local labor. This method tends to achieve a higher percentage of local hire and is strongly supported by many communities and funding agencies. The highly technical nature of power generation and distribution projects requires a limited number of workers with specific experience and expertise to be brought in for the project when not available locally. All work must be supervised and managed by a superintendent with extensive experience in the construction of rural power generation and distribution systems. All specialty work, such as pipe welding and electrical installation must be performed by skilled craftsmen with appropriate certifications.

Shipping project construction materials and equipment into Atmautluak will utilize a combination of scheduled and chartered summer/fall barge service, and over-ice winter transport. The module and components will be shipped from Anchorage to Bethel for staging. The module, components and installation

equipment are expected to be shuttled to Atmautluak near the close of the shipping season. Once the ground is frozen, the module and supporting equipment will be mobilized in Atmautluak.

7.1 Local Job Skills

An inquiry was made to the Village for information regarding the availability of specialty skilled labor in Atmautluak. The following table summarizes the results:

Skilled Trades	Number Available
Certified Welder	1
Welder Helper	7
Journeyman Electrician	0
Heavy Equipment Operator	11
Mechanic/Helper	3
Certified Truck Drivers	10

In addition to the specialty trades listed, there are a number of local residents with general labor experience in various types of construction. It appears that at a minimum a project superintendent, a pipe welder/mechanical foreman, a journeyman electrician and a journeyman lineman will need to be brought into Atmautluak for this project. A crew with specialty experience will also be required for future installation of the proposed wind project.

7.2 Local Equipment

Atmautluak provided the following inventory of locally available heavy equipment:

Unit / Owner	Make / Model #	Year / Condition
Loader w/forks	Case 621B	Unknown
Track Hoe, forklift, bucket, drill	Bobcat T190	2006

The equipment is in unknown condition. If any of the local equipment is to be used for the project, an experienced fleet service mechanic should be sent to Atmautluak to inspect the equipment and ensure that it is in proper operating condition prior to beginning construction.

7.3 Material Sources

Gravel is not currently expected to be required for pad development as the foundation will be supported on driven H-piles. Sand for grouting the thermosyphons will need to be imported.

8.0 SCHEDULE

The following schedule has been developed on the basis of performing the majority of the off-site work and mobilization in 2014 with the majority of the field work in

2015. This schedule is contingent on approval of the plan by the project participants as well as on funding availability.

- Aug - Dec 2013: Design, permitting, and site control.
- Dec 2013- Feb 2014: Fabrication of module structure and procure materials.
- Mar - May 2014: Module assembly.
- Jun 2014: Package and stage distribution materials.
- Jun 2014: Test module, package, and stage for shipment.
- Jul - Aug 2014: Ship module and other materials Anchorage to Bethel.
- Sept 2014: Ship module and other materials Bethel to Atmautluak.
- Feb - Apr 2015: Install power plant and heat recovery.
- May 2015: Power plant commissioning & operator training.
- Jun-Jul 2015: O&M manuals and project close out.

9.0 COST ESTIMATE

The construction cost estimates have been developed based on a "modified" force-account approach utilizing a combination of local labor, certified craftsmen, and specialty sub-contractors under the direction of an experienced construction manager. Labor rates are based on Title 36 equivalent wages for certified specialty labor and prevailing local force-account wage rates for general labor and equipment operation.

Detailed cost estimates are included in Appendix B. Separate estimates have been prepared for the Diesel Power Plant, Heat Recovery System, and Distribution System Maintenance. A summary of the estimated total costs, including all design, supervision, inspection, permitting, and a 15% contingency, are:

- $2,205,319 Diesel Power Plant
- $ 330,838 Heat Recovery Project*
- $ 84,946 Distribution System Maintenance
- **$2,621,103 Total Cost Proposed 2015 Energy Projects****

* Primary Heat Recovery to be constructed by ANTHC using separate funding source

** refer to separate Wind Power Generation CDR prepared by others for cost estimate

APPENDIX A

CONCEPT DESIGN DRAWINGS

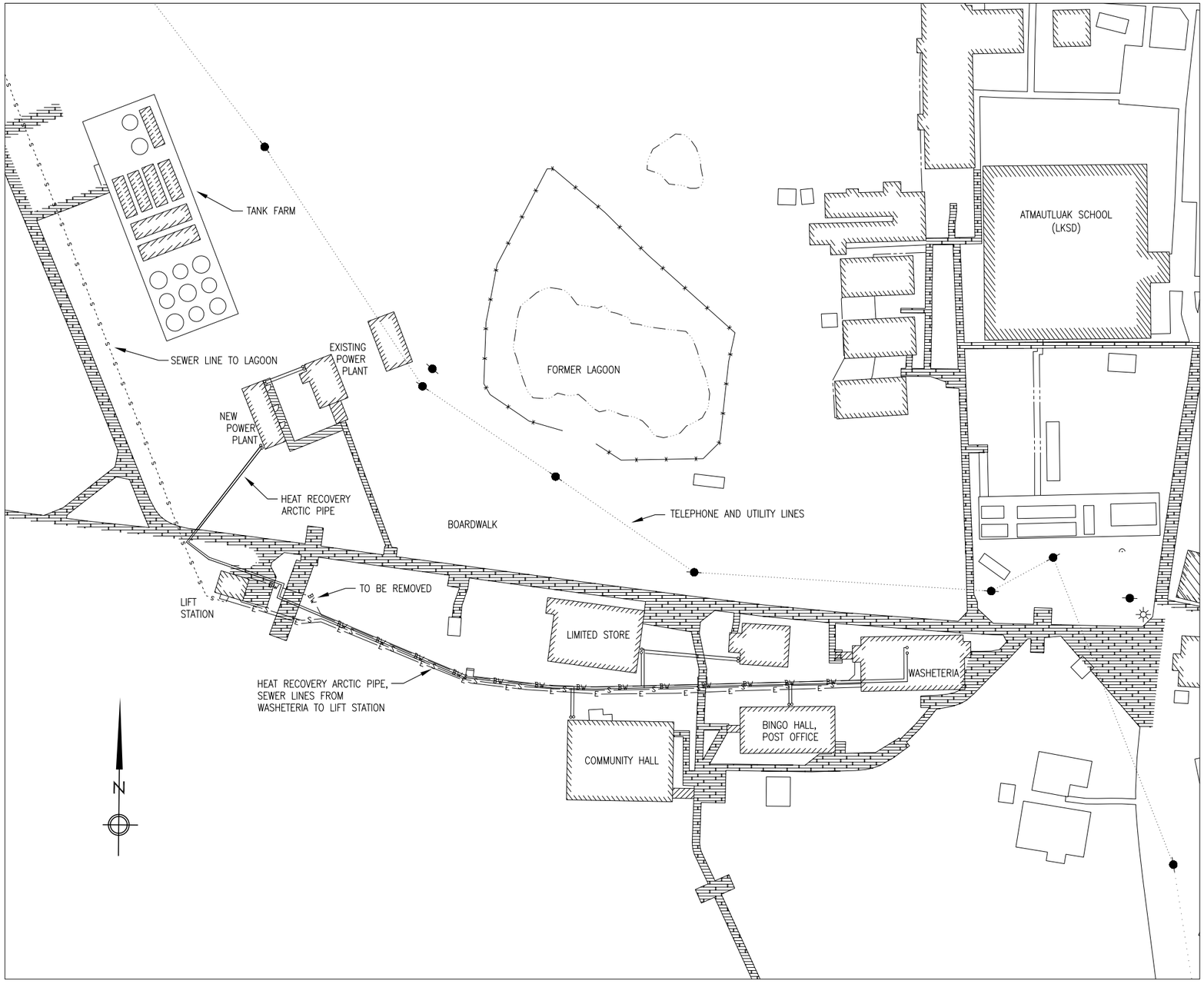

1 M1.1 OVERALL SITE PLAN
1"=40'

LEGEND

- GATE VALVE
- BALL VALVE
- CHECK VALVE
- BUTTERFLY VALVE
- HOSE END DRAIN VALVE
- GAUGE COCK
- AUTOMATIC AIR VENT
- THERMOMETER
- PRESSURE GAUGE
- FLEXIBLE CONNECTOR
- FLANGED JOINT
- UNION
- ELBOW TURNED UP
- ELBOW TURNED DOWN
- PIPING CONNECTION (TEE)
- CHANGE OF PIPE SIZE
- DIRECTION OF FLOW

ABBREVIATIONS

ø	DIAMETER (PHASE)
A	AMPS
AFF	ABOVE FINISHED FLOOR
BTU	BRITISH THERMAL UNIT
DFR	DIESEL FUEL RETURN
DFS	DIESEL FUEL SUPPLY
EWT	ENTERING WATER TEMPERATURE
EXIST	EXISTING
ECR	ENGINE COOLANT RETURN
ECS	ENGINE COOLANT SUPPLY
FPT	FEMALE PIPE THREAD
GA	GAUGE
GALV	GALVANIZED
GPM	GALLONS PER MINUTE
GRC	GALVANIZED RIGID CONDUIT
HP	HORSEPOWER
HRR	HEAT RECOVERY RETURN
HRS	HEAT RECOVERY SUPPLY
ID	INSIDE DIAMETER
KW	KILOWATT
LT	LIQUID TIGHT
LWT	LEAVING WATER TEMPERATURE
MAX	MAXIMUM
MBH	THOUSAND BTU PER HOUR
MIN	MINIMUM
MPT	MALE PIPE THREAD
NC	NORMALLY CLOSED
NO	NORMALLY OPEN
OC	ON CENTER
OD	OUTSIDE DIAMETER
PRV	PRESSURE RELIEF VALVE
PSI	POUNDS/PER SQUARE INCH
PSIG	POUNDS/PER SQ INCH GAUGE
SCH	SCHEDULE
TDH	TOTAL DEVELOPED HEAD
TYP	TYPICAL
UOR	USED OIL RETURN
V	VOLTS
W	WATTS
WG	WATER GAUGE
WPD	WATER PRESSURE DROP

SCHEDULE OF DRAWINGS

M1.1 OVERALL SITE PLAN AND SCHEDULE OF DRAWINGS

M1.2 SITE LAYOUT AND DETAILS

M1.3 LIFT STATION AREA PLAN AND DETAILS

M3.1 POWER PLANT EQUIPMENT LAYOUT PLAN, SECTION AND DETAILS

M3.2 POWER PLANT WALL ELEVATIONS AND DETAILS

PROJECT SCOPE

THE PURPOSE OF THIS PROJECT IS TO INSTALL A NEW DIESEL POWER PLANT AND UPGRADE RECENTLY INSTALLED HEAT RECOVERY SYSTEM. THE PROJECT MAY INCLUDE A FUTURE WIND GENERATION COMPONENT PENDING COMPLETION AND APPROVAL OF WIND CDR CURRENTLY IN PROGRESS.

- A NEW HEAT RECOVERY SYSTEM WILL BE INSTALLED IN CONJUNCTION WITH AN UPGRADE TO THE WASHETERIA SEWER LINE. ALASKA TRIBAL HEALTH CONSORTIUM HAS SECURED FUNDING TO INSTALL A HEAT RECOVERY SYSTEM FROM THE EXISTING POWER PLANT TO THE EXISTING COMMUNITY WASHETERIA. THE ARCTIC PIPE WILL BE ROUTED TO THE WASHETERIA ALONGSIDE THE RECENTLY UPGRADED SEWER OUTFALL.
- DURING CONSTRUCTION OF THE POWER PLANT, THE NEW HEAT RECOVERY SYSTEM WILL BE EXPANDED TO INCLUDE THE COMMUNITY HALL, LIMITED STORE, POST OFFICE/BINGO HALL.
- THE EXISTING POWER PLANT WILL OPERATE THROUGH CONSTRUCTION. ONCE DECOMMISSIONED, THE BUILDING WILL BE CONVERTED TO HEATED STORAGE AND WORKSHOP FOR THE UTILITY.
- ALL PIPING BETWEEN THE POWER PLANT AND THE END USER BUILDINGS WILL CONSIST OF STEEL ARCTIC PIPE, TO BE MOUNTED EITHER AT GRADE ON TIMBERS OR ABOVE GRADE ON SUPPORTS.
- END USERS WILL WILL RECEIVE EITHER A HEAT EXCHANGER OR A CABINET STYLE UNIT HEATER WHICH WILL TRANSFER HEAT FROM THE HEAT RECOVERY SYSTEM TO THE END USER. THE HEAT RECOVERY SYSTEM WILL PROVIDE SUPPLEMENTAL HEAT ONLY. ALL EXISTING OIL FIRED HEATING APPLIANCES SHALL REMAIN IN SERVICE.

PRELIMINARY
NOT FOR
CONSTRUCTION

State of Alaska
Department of Community and Economic Development
AIDEA/AEA
Rural Energy Group
813 West Northern Lights Blvd.
Anchorage, Alaska 99503
ALASKA ENERGY AUTHORITY

PROJECT: ATMAUTLUAK POWER SYSTEM UPGRADE
CONCEPT DESIGN REPORT

TITLE: OVERALL SITE PLAN AND SCHEDULE OF DRAWINGS

Gray Stassel Engineering, Inc.
P.O. 111405, Anchorage, AK 99511 (907)349-0100

DRAWN BY: WJP		SCALE: AS NOTED
DESIGNED BY: WJP		DATE: 6/11/2013
FILE NAME: ATMU M1–M2		SHEET:
PROJECT NUMBER: 11–02–9559		M1.1 OF 3

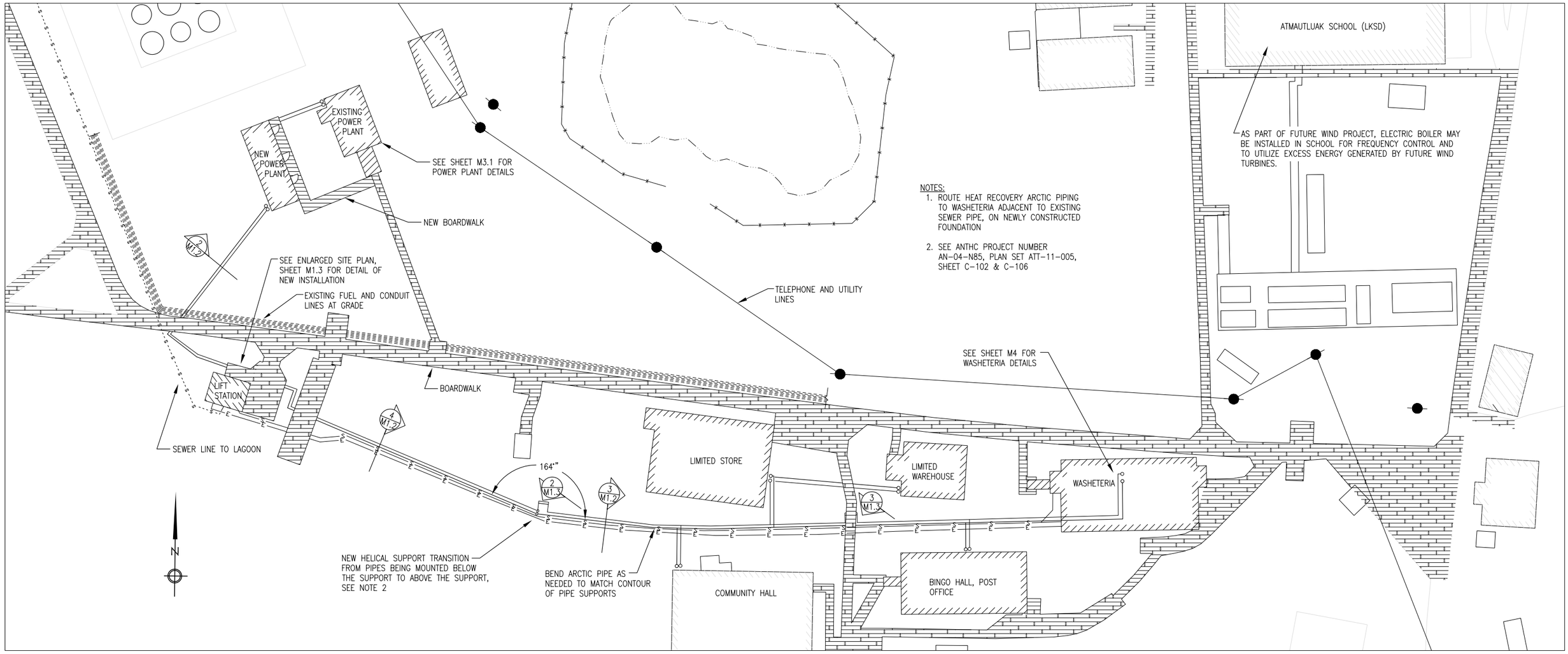

1 M1.2 HEAT RECOVERY SITE LAYOUT

1"=20'

NOTES:

1) INSTALL ALL PIPE SUPPORTS 10' ON CENTER MAX.

2) PIPE STRAP SIZED FOR ARCTIC PIPE ARE LARGER THAN PIPE O.D. TO ALLOW FOR EXPANSION AND MOVEMENT.

3) PROVIDE ADDITIONAL TREATED TIMBER BLOCKING AS REQUIRED TO MAINTAIN UNIFORM SLOPE. FASTEN LAYERS WITH 4" CERAMIC COATED WOOD SCREWS.

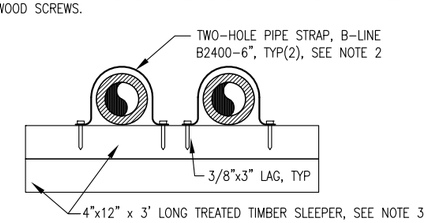

2 M1.2 PIPE SUPPORT ON SLEEPERS

NO SCALE

NOTES:

1) HEAT RECOVERY SUPPLY AND RETURN PIPES ARE TO BE SUPPORTED 10' ON CENTER MAX.

2) PIPE STRAP SIZED FOR ARCTIC PIPE ARE LARGER THAN PIPE O.D. TO ALLOW FOR EXPANSION AND MOVEMENT.

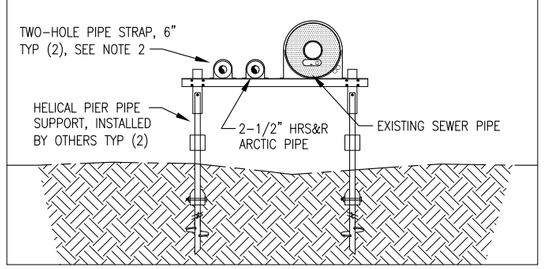

3 M1.2 ARCTIC PIPE SUPPORT DETAIL

NO SCALE

NOTES:

1) HEAT RECOVERY SUPPLY AND RETURN PIPES ARE TO BE SUPPORTED 10' ON CENTER MAX.

2) PIPE STRAP SIZED FOR ARCTIC PIPE ARE LARGER THAN PIPE O.D. TO ALLOW FOR EXPANSION AND MOVEMENT.

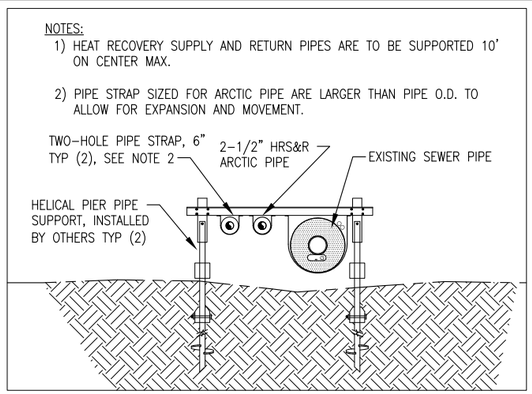

4 M1.2 ARCTIC PIPE HANGING SUPPORT DETAIL

NO SCALE

PRELIMINARY NOT FOR CONSTRUCTION

State of Alaska
Department of Community and Economic Development
AIDEA/AEA
Rural Energy Group
813 West Northern Lights Blvd.
Anchorage, Alaska 99503
ALASKA ENERGY AUTHORITY

PROJECT: ATMAUTLUAK POWER SYSTEM UPGRADE CONCEPT DESIGN REPORT

TITLE: HEAT RECOVERY SITE LAYOUT AND DETAILS

Gray Stassel Engineering, Inc.
P.O. 111405, Anchorage, AK 99511 (907)349-0100

DRAWN BY: WJP	SCALE: AS NOTED
DESIGNED BY: WJP	DATE: 6/11/2013
FILE NAME: ATMU M1-M2	SHEET: M1.2 OF 3
PROJECT NUMBER: 11-02-9559	

NOTE:
1. ROUTE PIPE TO AVOID BOARDWALK SUPPORTS, 90° ELBOW MAY BE LOCATED UNDER BOARDWALK, LOCATE 15° ELBOW AS NEEDED
2. MINIMUM OFFSET OF 5' REQUIRED TO ALLOW FOR EXPANSION OF ARCTIC PIPING
3. ARCTIC PIPING TO BE SUPPORTED BY HANGING FROM BOARDWALK. DISASSEMBLE BOARDWALK AS NECESSARY TO FACILITATE INSTALLATION
4. ALL PIPING TO BE INSTALLED WITH MIN OF 2" THICK X 24" WIDE DOW HIGH-60 RIGID INSULATION BETWEEN PIPE AND FINISH GRADE
5. MAINTAIN A MAXIMUM OF 10' BETWEEN ARCTIC PIPE SUPPORTS, TO BE INSTALLED BY OTHERS

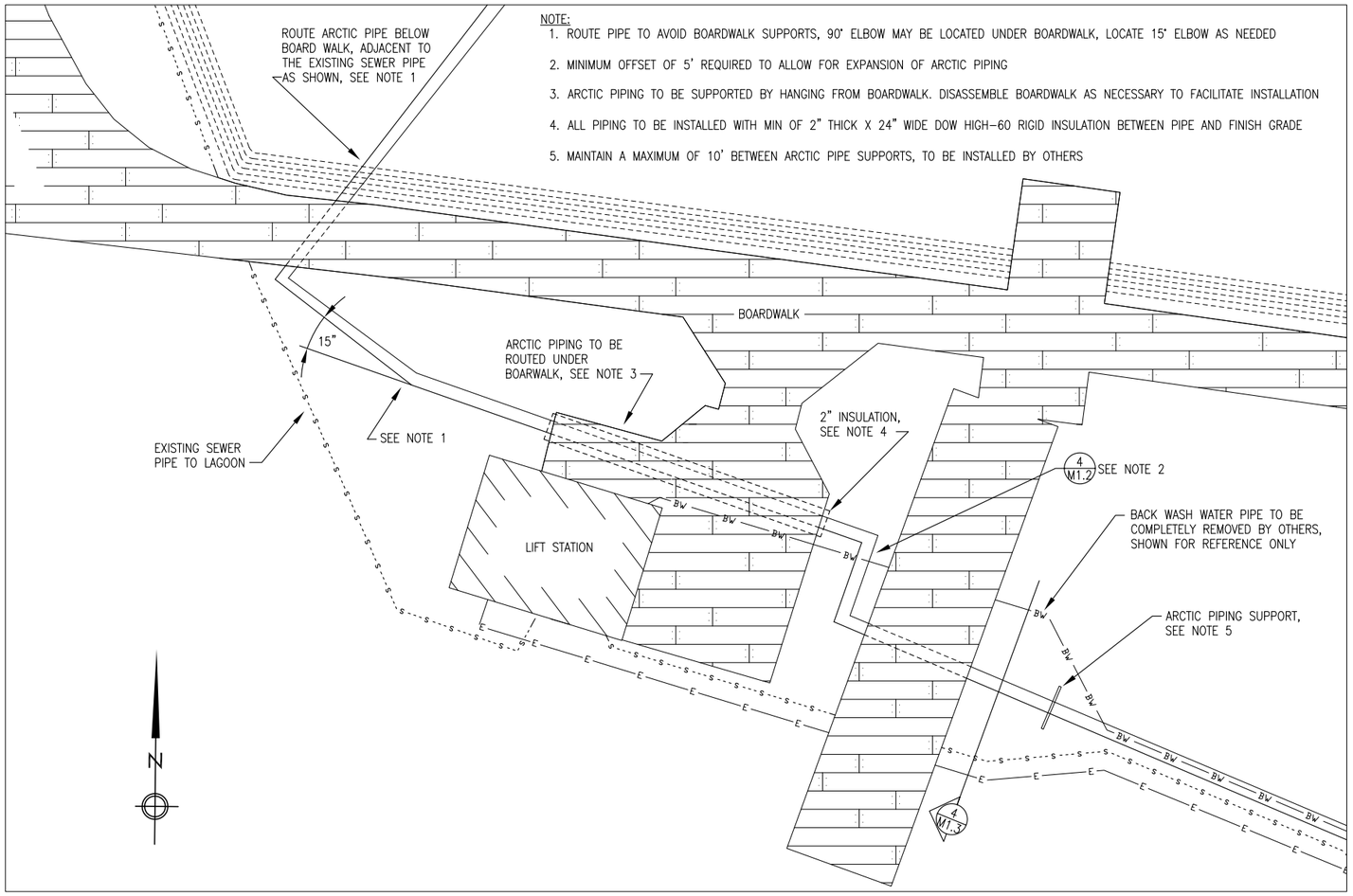

1 M1.2 LIFT STATION AREA PLAN
1"=8'

NOTES:
1. ARCTIC PIPE TRANSITIONS FROM BELOW PIPE SUPPORTS TO ABOVE PIPE SUPPORTS. LOWER PIPES AS SHOWN TO MATCH ELEVATION OF PIPE SUPPORTS.
2. PIPE ROUTE ROTATES APPROXIMATELY 16°, REFER TO VIEW 1/M1.2

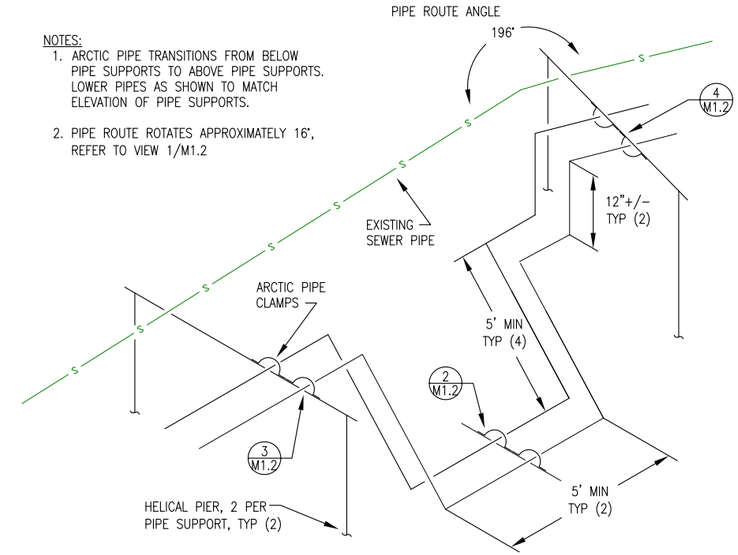

2 M1.3 ARCTIC PIPE EXPANSION AND HEIGHT ADJUSTMENT ISOMETRIC
NO SCALE

NOTES:
1. ROUTE EXPANSION JOINT UNDER EXISTING STEPPED RAMP OVER PIPE RACK
2. MAN RAMP OVER SEWER PIPE NOT SHOWN

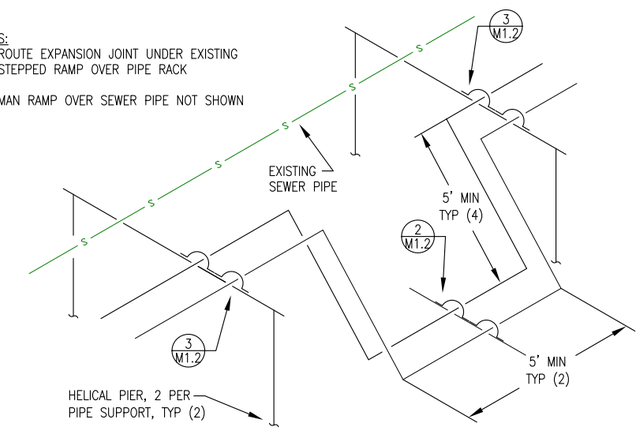

3 M1.3 ARCTIC PIPE EXPANSION ISOMETRIC
NO SCALE

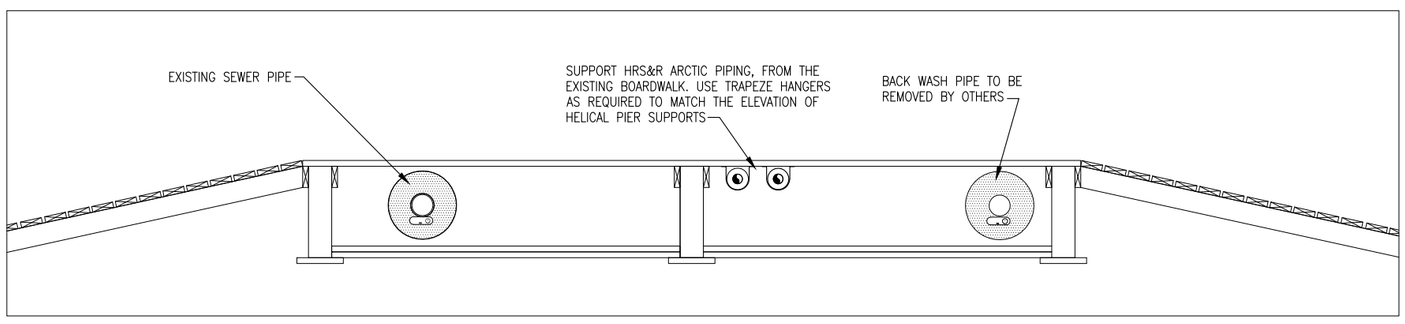

4 M1.3 BOARDWALK SUPPORT DETAIL
1"=20'

PRELIMINARY
NOT FOR
CONSTRUCTION

State of Alaska
Department of Community and Economic Development
AIDEA/AEA
Rural Energy Group
813 West Northern Lights Blvd.
Anchorage, Alaska 99503
ALASKA ENERGY AUTHORITY

PROJECT: ATMAUTLUAK POWER SYSTEM UPGRADE CONCEPT DESIGN REPORT

TITLE: LIFT STATION AREA PLAN AND DETAILS

Gray Stassel Engineering, Inc.
P.O. 111405, Anchorage, AK 99511 (907)349-0100

DRAWN BY: WJP		SCALE: AS NOTED
DESIGNED BY: WJP		DATE: 6/11/2013
FILE NAME: ATMU M1-M2		SHEET:
PROJECT NUMBER: 11-02-9559		M1.3 OF 3

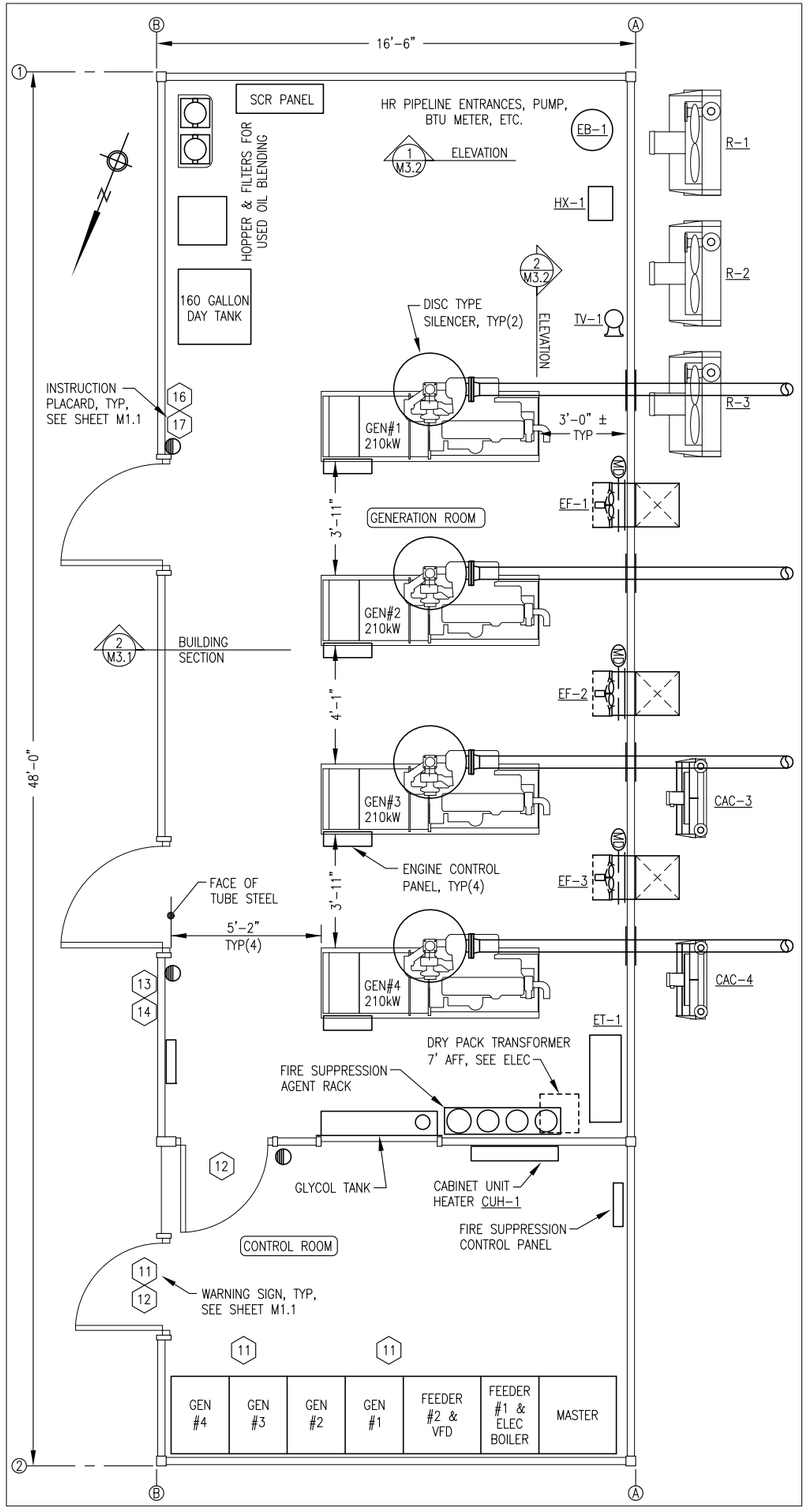

1 M3.1 EQUIPMENT LAYOUT PLAN
3/8"=1'-0"

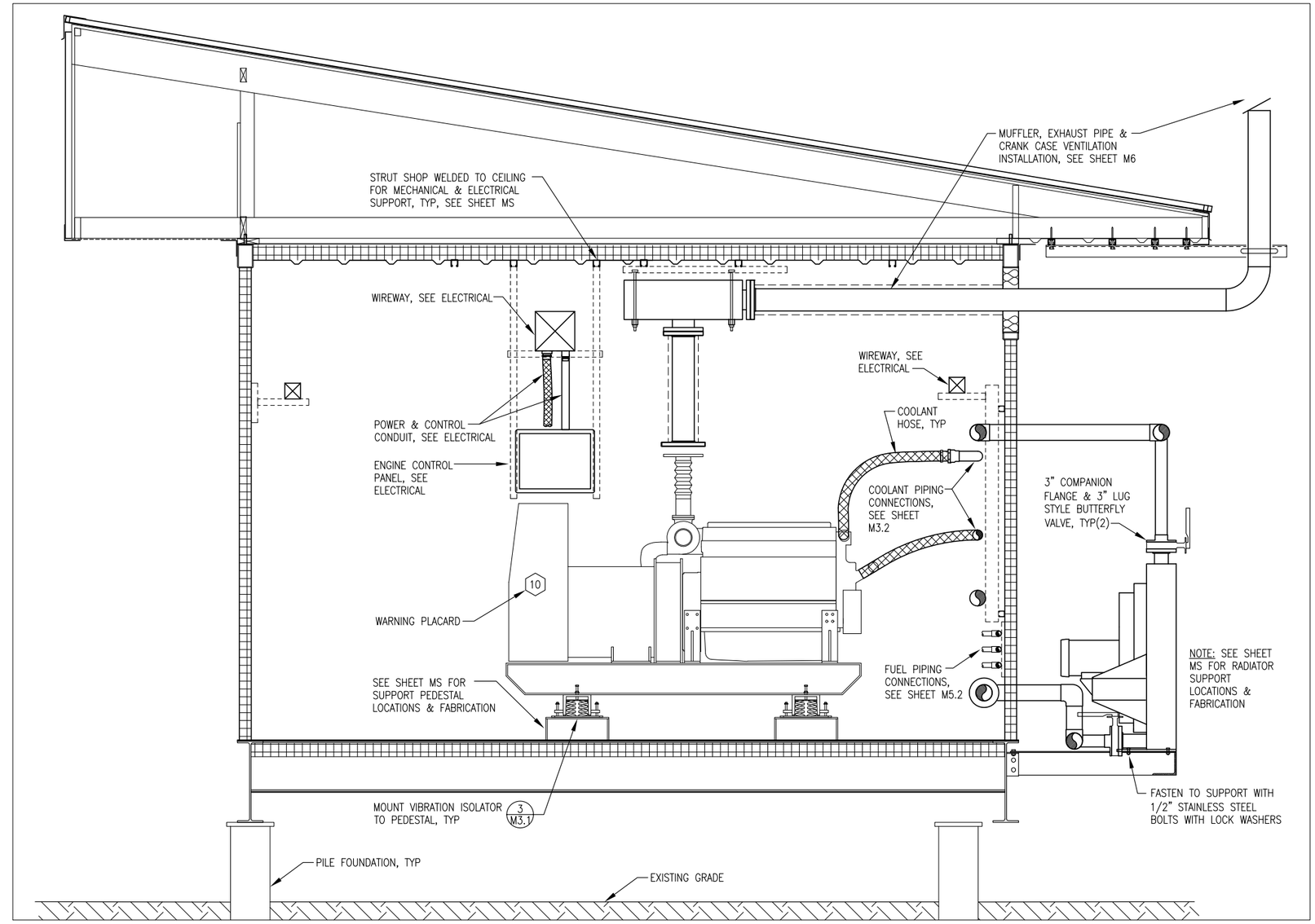

2 M3.1 BUILDING SECTION/GENERATOR INSTALLATION
3/4"=1'-0"

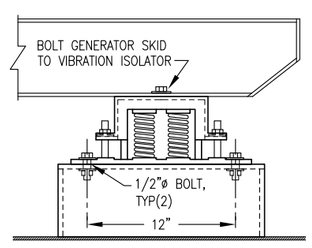

NOTE: VIBRATION ISOLATORS FURNISHED WITH GENERATORS. VERIFY GENERATOR SKID & VIBRATION ISOLATOR BOLTING DIMENSIONS PRIOR TO DRILLING PEDESTALS.

3 M3.1 VIBRATION ISOLATOR INSTALLATION
1"=6"

PRELIMINARY NOT FOR CONSTRUCTION

State of Alaska
Department of Community and Economic Development
AIDEA/AEA
Rural Energy Group
813 West Northern Lights Blvd.
Anchorage, Alaska 99503
ALASKA ENERGY AUTHORITY

PROJECT: ATMAUTLUAK POWER SYSTEM UPGRADE
CONCEPT DESIGN REPORT

TITLE: POWER PLANT
EQUIPMENT LAYOUT PLAN, SECTION AND DETAILS

Gray Stassel Engineering, Inc.
P.O. 111405, Anchorage, AK 99511 (907)349-0100

DRAWN BY: WJP	SCALE: AS NOTED
DESIGNED BY: WJP	DATE: 6/11/2013
FILE NAME: ATMU M1-M2	SHEET: M3.1 OF 3
PROJECT NUMBER: 11-02-9559	

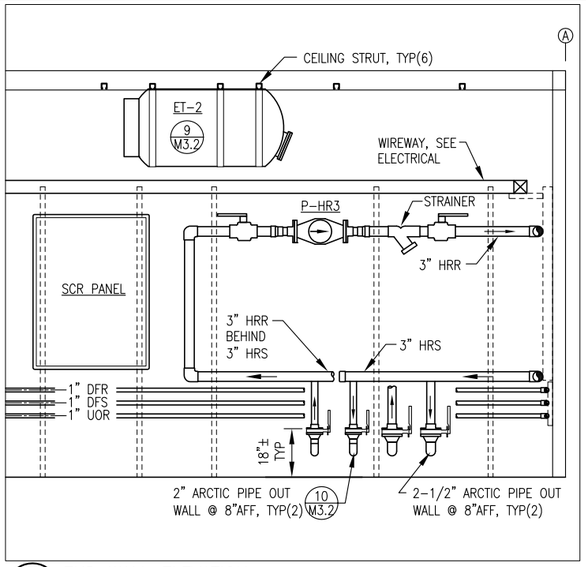

1 M3.2 END WALL ELEVATION
1/2"=1'-0"

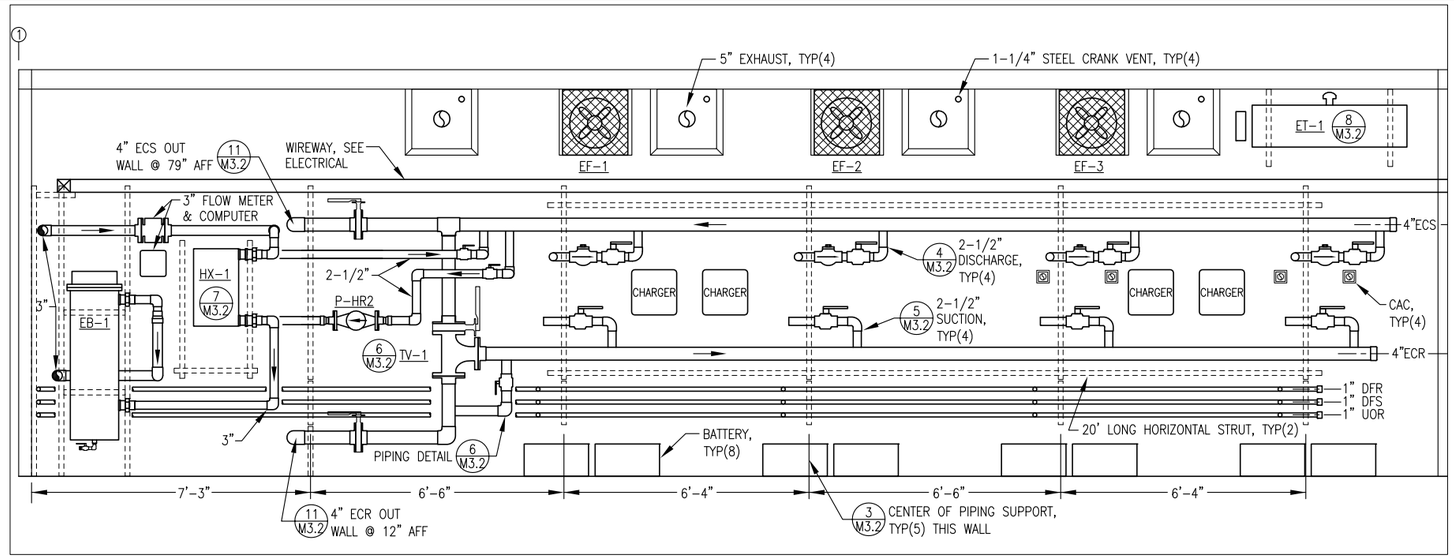

2 M3.2 BACK WALL ELEVATION
1/2"=1'-0"

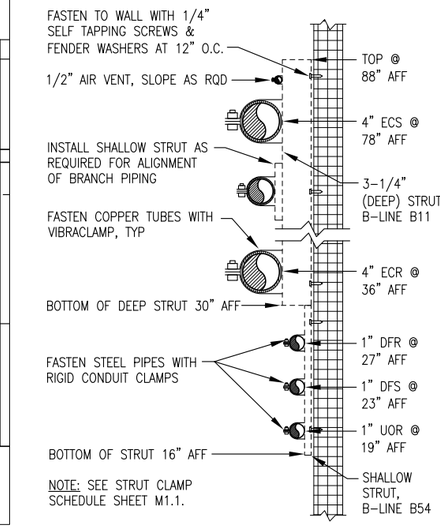

3 M3.2 PIPE SUPPORT
NO SCALE

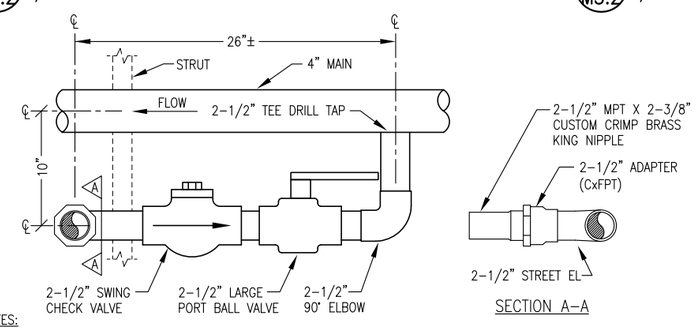

NOTES:

1) MAIN PIPING 4" WITH 1" INSULATION. ALL BRANCH PIPING NOT INSULATED.

2) ALL PIPING TYPE L COPPER TUBE. ALL LINE SIZE VALVES SOLDER END.

4 M3.2 TYPICAL GENERATOR DISCHARGE CONNECTION
NO SCALE

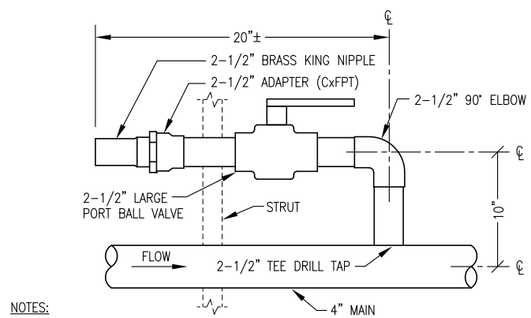

NOTES:

1) MAIN PIPING 4" WITH 1" INSULATION. ALL BRANCH PIPING NOT INSULATED.

2) ALL PIPING TYPE L COPPER TUBE. ALL LINE SIZE VALVES SOLDER END.

5 M3.2 TYPICAL GENERATOR SUCTION CONNECTION
NO SCALE

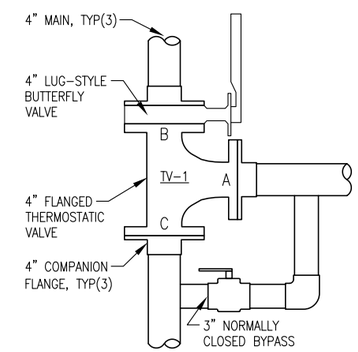

6 M3.2 TV-1 INSTALLATION
NO SCALE

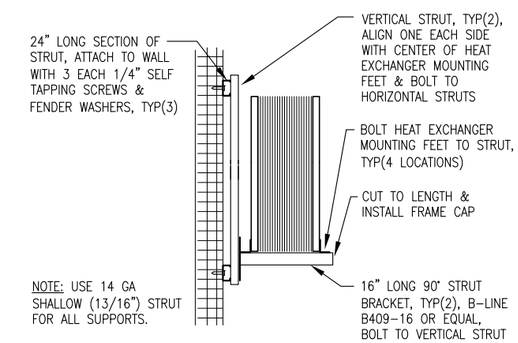

7 M3.2 HEAT EXCHANGER SUPPORT FROM WALL
NO SCALE

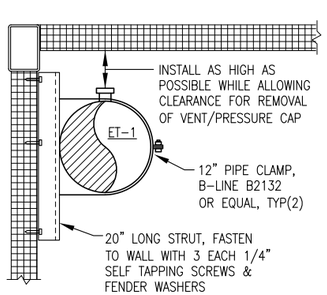

8 M3.2 EXP TANK ET-1 SUPPORT
NO SCALE

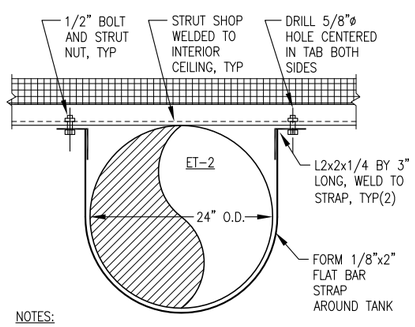

NOTES:

1) SMOOTH EDGES AFTER FABRICATION AND PAINT STRAPS PER SPECIFICATIONS.

2) ONE STRAP SHOWN. INSTALL FOUR IDENTICAL STRAPS.

9 M3.2 EXP TANK ET-2 SUPPORT
NO SCALE

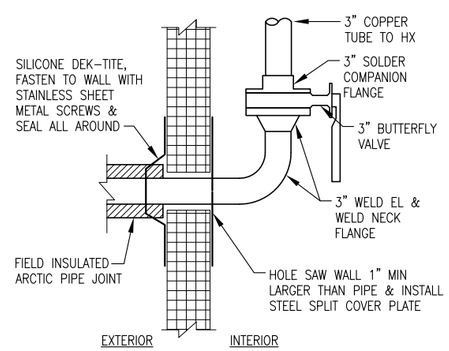

10 M3.2 ARCTIC PIPE WALL PENETRATION
NO SCALE

NOTE: THIS DETAIL APLIES TO ALL PIPE & CONDUIT 2" & LARGER EXCEPT ARCTIC PIPE.

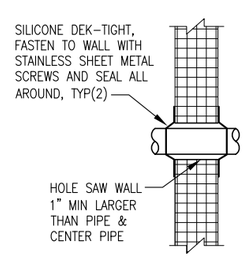

11 M3.2 TYP WALL PENETRATION
NO SCALE

PRELIMINARY NOT FOR CONSTRUCTION

State of Alaska
Department of Community and Economic Development
AIDEA/AEA
Rural Energy Group
813 West Northern Lights Blvd.
Anchorage, Alaska 99503
ALASKA ENERGY AUTHORITY

PROJECT: ATMAUTLUAK POWER SYSTEM UPGRADE CONCEPT DESIGN REPORT

TITLE: POWER PLANT WALL ELEVATIONS AND DETAILS

Gray Stassel Engineering, Inc.
P.O. 111405, Anchorage, AK 99511 (907)349-0100

DRAWN BY: WJP		SCALE: AS NOTED
DESIGNED BY: WJP		DATE: 6/11/2013
FILE NAME: ATMU M3-M7		SHEET:
PROJECT NUMBER: 11-02-9559		M3.2 OF 3

APPENDIX B

CONSTRUCTION COST ESTIMATE

ITEM	QUAN	UNIT	UNIT COST	MATL COST	UNIT HRS	LAB HRS	LAB RATE	LABOR COST	CONTR COST	TOTAL COST
Module Fabrication Work in Anchorage										
Module Structure	1	ea.	$160,000	$160,000	0	0	$95	$0		$160,000
Move/Setup Module	1	lump	$3,000	$3,000	40	40	$95	$3,800		$6,800
210 kW Genset (JD 6090AFM)	2	ea.	$85,000	$170,000	30	60	$95	$5,700		$175,700
Charge Air Coolers	2	ea.	$10,000	$20,000	20	40	$95	$3,800		$23,800
Charge Air Tubing etc.	1	lump	$5,000	$5,000	20	20	$95	$1,900		$6,900
Switchgear	1	ea.	$220,000	$220,000	100	100	$95	$9,500		$229,500
Fire Suppression	1	lump	$0	$0	80	80	$95	$7,600	$40,000	$47,600
Sheet Metal Fabrications	1	lump	$10,000	$10,000	60	60	$95	$5,700		$15,700
Radiators	3	ea.	$11,000	$33,000	20	60	$95	$5,700		$38,700
Coolant Piping & Equipment	1	lump	$30,000	$30,000	200	200	$95	$19,000		$49,000
Day Tank, Hopper, Blender	1	lump	$8,000	$8,000	60	60	$95	$5,700		$13,700
Day Tank Appurtenances	1	lump	$6,000	$6,000	30	30	$95	$2,850		$8,850
Day Tank and Blender Panels	1	lump	$15,000	$15,000	40	40	$95	$3,800		$18,800
Fuel & Oil Pumps	1	lump	$5,000	$5,000	30	30	$95	$2,850		$7,850
Fuel, Oil, & Exhaust Piping	1	lump	$10,000	$10,000	80	80	$95	$7,600		$17,600
Hoses & Fittings	1	lump	$3,000	$3,000	20	20	$95	$1,900		$4,900
Pipe Insulation	1	lump	$3,000	$3,000	40	40	$95	$3,800		$6,800
Instrumentation	1	lump	$5,000	$5,000	20	20	$95	$1,900		$6,900
Conduit, Cable & Elec Equipment	1	lump	$20,000	$20,000	300	300	$95	$28,500		$48,500
Feeder & Shielded Cable	1	lump	$20,000	$20,000	40	40	$95	$3,800		$23,800
Misc Strut, Hangers, Fasteners, Etc.	1	lump	$6,000	$6,000	60	60	$95	$5,700		$11,700
Signs & Valve Tags	1	lump	$1,000	$1,000	30	30	$95	$2,850		$3,850
Misc Hardware	1	lump	$2,000	$2,000	0	0	$95	$0		$2,000
Misc Tools & Safety Gear	1	lump	$5,000	$5,000	0	0	$95	$0		$5,000
Welding Rod, Gases, Etc.	1	lump	$5,000	$5,000	0	0	$95	$0		$5,000
Fill Coolant, Fuel, & Lube	1	lump	$5,000	$5,000	20	20	$95	$1,900		$6,900
Shop Load Test	1	lump	$0	$0	80	80	$95	$7,600		$7,600
Package for Shipping	1	lump	$1,000	$1,000	80	80	$95	$7,600		$8,600
Module Fabrication Sub-Total				$771,000		1,590		$151,050	$40,000	$962,050

ITEM	QUAN	UNIT	UNIT COST	MATL COST	UNIT HRS	LAB HRS	LAB RATE	LABOR COST	CONTR COST	TOTAL COST
Power Plant Installation in Atmautluak										
Clear & Prep Site	1	lump	$0	$0	60	60	$95	$5,700		$5,700
Driven H-Piles,	1	lump	$60,000	$60,000	0	0	$95	$0		$60,000
Thermosyphons & Grout	4	ea.	$5,000	$20,000	12	48	$95	$4,560		$24,560
Place Module on H-Piles	1	lump	$0	$0	0	0	$95	$0	$80,000	$80,000
Contractor Expenses, Equipment Stby	1	lump	$0	$0	0	0	$95	$0	$93,350	$93,350
Fuel Piping & 2" Actuated Ball Valve	1	lump	$10,000	$10,000	80	80	$95	$7,600		$17,600
Roof System	1	lump	$35,000	$35,000	200	200	$95	$19,000		$54,000
Stairs & Boardwalk	1	lump	$15,000	$15,000	80	80	$95	$7,600		$22,600
Install Hoods & Exhaust	1	lump	$0	$0	60	60	$95	$5,700		$5,700
Misc Tools & Safety Gear	1	lump	$5,000	$5,000	0	0	$95	$0		$5,000
Welding Rod, Gases, Etc.	1	lump	$5,000	$5,000	0	0	$95	$0		$5,000
Rent/Repair Heavy Equip	1	lump							$20,000	$20,000
ATV Rent	3	mo.							$1,800	$1,800
Welder/Compr/Misc Tool Rent	1	lump							$10,000	$10,000
Project Diesel Fuel/Gasoline	1	lump							$5,000	$5,000
Commission/Train Operators	40	hr			1	40	$95	$3,800		$3,800
Move & Reinstall Existing JD 6081	2	ea.	$0	$0	50	100	$95	$9,500		$9,500
Rebuild Existing JD 6081	2	ea.	$0	$0	0	0	$95	$0	$30,000	$30,000
Superintendent Overhd Off-Site	40	hr			1	40	$95	$3,800		$3,800
Superintendent Overhd On-Site	40	hr			1	40	$95	$3,800		$3,800
Crew Travel Time	100	hr			1	100	$95	$9,500		$9,500
Crew Airfares	5	trips							$7,500	$7,500
Crew Per Diem	100	mn.dy							$6,000	$6,000
Housing Rent	3	mo.							$6,000	$6,000
Barge to Bethel	1	trip							$100,000	$100,000
Module Mobilization to Atmautluak	1	trip							$115,409	$115,409
Miscellaneous Air Freight	1	lump							$10,000	$10,000
Power Plant Installation Sub-Total				$150,000.00		848		$80,560.00	$485,059.00	$715,619.00
Construction Sub-Total				$921,000		2,438		$231,610	$525,059	$1,677,669
Engineering Design & Permitting	1	lump							$120,000	
Construction Administration	1	lump							$120,000	
Project Sub-Total				$921,000				$231,610	$765,059	$1,917,669
Contingency	15	%								$287,650
									Total Project Cost	**$2,205,319**

ITEM	QUAN	UNIT	UNIT COST	MATL COST	UNIT HRS	LAB HRS	LAB RATE	LABOR COST	CONTR COST	TOTAL COST
Site Work & Arctic Pipe (Note: Arctic Pipe Main Runs to be Installed as Part of ANTHC Project - No Cost Here)										
2" Arctic Pipe	400	ft.	$37.50	$15,000	0.25	100	$95	$9,500		$24,500
2-1/2" Arctic Pipe	40	ft.	$40	$1,600	0.30	12	$95	$1,140		$2,740
Heavy Timber Sleepers	100	lin.ft.	$5	$500	0.25	25	$95	$2,375		$2,875
Prop Glycol (50/50 - 55 gal drum)	3	ea	$650	$1,950	0.00	0	$95	$0		$1,950
Boardwalk Modifications	1	lump	$10,000	$5,000	40	40	$95	$3,800		$8,800
Power Plant (Note: Cost Included in the Power Plant Cost Estimate)										
Power Plant Warehouse										
Unit Heater	1	ea	$1,000	$1,000	10	10	$95	$950		$1,950
1" Copper Pipe	40	lin.ft.	$15	$600	1	40	$95	$3,800		$4,400
Misc Electrical	1	lump	$1,000	$1,000	10	10	$95	$950		$1,950
Interior Piping & Equipment	1	lump	$2,000	$2,000	20	20	$95	$1,900		$3,900
Instrumentation/Controls	1	lump	$1,000	$1,000	10	10	$95	$950		$1,950
Strut, Hangers, Fasteners, Etc.	1	lump	$2,000	$2,000	10	10	$95	$950		$2,950
Misc Hardware	1	lump	$1,000	$1,000	5	5	$95	$475		$1,475
Community Hall										
Unit Heater	1	ea	$1,200	$1,200	10	10	$95	$950		$2,150
1.5" Copper Pipe	50	lin.ft.	$18	$875	1	50	$95	$4,750		$5,625
Misc Electrical	1	lump	$1,000	$1,000	10	10	$95	$950		$1,950
Interior Piping & Equipment	1	lump	$3,000	$3,000	30	30	$95	$2,850		$5,850
Instrumentation/Controls	1	lump	$2,000	$2,000	10	10	$95	$950		$2,950
Strut, Hangers, Fasteners, Etc.	1	lump	$3,000	$3,000	10	10	$95	$950		$3,950
Misc Hardware	1	lump	$2,000	$2,000	10	10	$95	$950		$2,950
Limited Store/Warehouse										
Store Unit Heater	1	ea	$1,200	$1,200	20	20	$95	$1,900		$3,100
Warehouse Unit Heater	1	ea	$1,000	$1,000	10	10	$95	$950		$1,950
1.5" Copper Pipe	40	lin.ft.	$18	$720	1.0	40	$95	$3,800		$4,520
2" Arctic Pipe	200	lin.ft.	$38	$7,500	0.2	40	$95	$3,800		$11,300
BTU Meter	1	ea	$12,000	$12,000	10	10	$95	$950		$12,950
Misc Electrical	1	lump	$3,000	$3,000	20	20	$95	$1,900		$4,900
Interior Piping & Equipment	1	lump	$5,000	$5,000	20	20	$95	$1,900		$6,900
Instrumentation/Controls	1	lump	$3,000	$3,000	10	10	$95	$950		$3,950
Strut, Hangers, Fasteners, Etc.	1	lump	$2,000	$2,000	10	10	$95	$950		$2,950
Misc Hardware	1	lump	$3,000	$3,000	10	10	$95	$950		$3,950

ITEM	QUAN	UNIT	UNIT COST	MATL COST	UNIT HRS	LAB HRS	LAB RATE	LABOR COST	CONTR COST	TOTAL COST
Bingo Hall/Post Office										
Bingo Unit Heater	1	ea	$1,000	$1,000	10	10	$95	$950		$1,950
Post O. Unit Heater	1	ea	$1,000	$1,000	10	10	$95	$950		$1,950
1" Copper Pipe	40	lin.ft.	$15	$600	1	40	$95	$3,800		$4,400
Misc Electrical	1	lump	$2,000	$2,000	10	10	$95	$950		$2,950
Interior Piping & Equipment	1	lump	$3,000	$3,000	20	20	$95	$1,900		$4,900
Instrumentation/Controls	1	lump	$3,000	$3,000	15	15	$95	$1,425		$4,425
Strut, Hangers, Fasteners, Etc.	1	lump	$2,000	$2,000	10	10	$95	$950		$2,950
Misc Hardware	1	lump	$2,000	$2,000	5	5	$95	$475		$2,475
Washeteria (Note: Washeteria Equipment to be Installed as Part of ANTHC Project - No Cost Here)										
General										
Misc Tools & Safety Gear	1	lump	$2,000	$2,000	0	0	$95	$0		$2,000
Signs & Valve Tags	1	lump	$500	$500	10	10	$95	$950		$1,450
Welding Rod, Gases, Etc.	1	lump	$5,000	$5,000	0	0	$95	$0		$5,000
Misc. Building Modifications	1	lump	$5,000	$5,000	40	40	$95	$3,800		$8,800
Rent/Repair Heavy Equip	1	lump							$5,000	$5,000
ATV Rent	1	mo.							$600	$600
Welder/Compr/Misc Tool Rent	1	lump							$5,000	$5,000
Project Diesel Fuel/Gasoline	1	lump							$2,000	$2,000
Commission System	20	hr			1	20	$95	$1,900		$1,900
Superintendent Overhd Off-Site	20	hr			1	20	$95	$1,900		$1,900
Superintendent Overhd On-Site	20	hr			1	20	$95	$1,900		$1,900
Crew Travel Time	60	hr			1	60	$95	$5,700		$5,700
Crew Airfares	3	trips							$4,500	$4,500
Crew Per Diem	60	mn.dy							$3,600	$3,600
Housing Rent	2	mo.							$4,000	$4,000
Miscellaneous Air Freight	1	lump							$7,000	$7,000
Construction Sub-Total				$111,245		892		$84,740	$31,700	$227,685
Engineering Design & Permitting	1	lump							$30,000	
Construction Administration	1	lump							$30,000	
Project Sub-Total				$111,245				$84,740	$91,700	$287,685
Contingency	15	%								$43,153
									Total Project Cost	**$330,838**

ITEM	QUAN	UNIT	UNIT COST	MATL COST	UNIT HRS	LAB HRS	LAB RATE	LABOR COST	CONTR COST	TOTAL COST
Atmautluak Distribution Maintenance & Load Balancing										
New Helical Anchors	22	ea.	$1,000	$22,000	8	176	$95	$16,720		$38,720
3 Phase Load Balancing	1	lump	$1,000	$1,000	20	20	$95	$1,900		$2,900
Lineman Overhead Off-Site	10	hr			1	10	$95	$950		$950
Lineman Overhead On-Site	20	hr			1	20	$95	$1,900		$1,900
Crew Travel Time	40	hr			1	40	$95	$3,800		$3,800
Crew Airfares	2	trips							$3,000	$3,000
Crew Per Diem	27	mn.dy							$1,596	$1,596
Housing Rent	2	week							$1,000	$1,000
Miscellaneous Air Freight	1	lump							$5,000	$5,000
Construction Sub-Total				$23,000		266		$25,270	$10,596	$58,866
Engineering Design & Permitting	1	lump							$10,000	
Construction Administration	1	lump							$5,000	
Project Subtotal				$23,000				$25,270	$25,596	$73,866
Contingency	15	%								$11,080
									Total Distribution Work Cost	**$84,946**

APPENDIX C

SITE CONTROL DOCUMENTS

Site Control Status Report
Atmautluak Rural Power System Upgrade

As requested, I have reviewed the land status for the Atmautluak Rural Power System Upgrade.

Land Status Report

I conducted an online research of the State Recording Office information for the project area. It appears that record title is vested in Atmautluak Limited for the surface estate of Section 20, Township 9 North, Range 73 West, Seward Meridian. Title was transferred to Atmautluak Limited by Interim Conveyance #448 dated November 20, 1981. A copy of the recorded document is attached.

It was noted that there are 5 recorded easements documents that may relate to the project area. The mapping for most of these easements is very poor. It is difficult to determine from some of the documents whether the easements have any effect on the project area. Following is a brief description of each easement:

- Right of way easement to United Utilities dated October 18, 1982. This is essentially a blanket utility easement. The easement is 10 feet in width.

- Deed of easement to Atmautluak Village Council dated August 7, 1984. This is for "a sewage lift station force main and appurtenances."

- Easement to Atmautluak Traditional Council for electrical power system dated November 19, 2002. This is a 15 foot easement for electrical purposes.

- Easement to Atmautluak Traditional Council for Temporary Access Across Property dated December 26, 2006. This document is confusing because in one section it indicates the easement expires on December 31, 2010, and in another section it states that the "easement is perpetual so long as the parcel shall actually be used for the purposes specified." This easement is related to "equipment storage and work camp site."

- Easement to the Village of Atmautluak for public boardwalk and dock dated September 16, 2010. There is an exhibit attached to this easement which adequately depicts the easement area.

Copies of the recorded documents are attached.

Observations

An easement is a right to use property for a specified purpose. An easement is not a possessory interest. Therefore, other uses can be allowed within easement areas by the landowner provided that the new use does not interfere with the granted use.

It is noted that two of the easements are granted to the "Atmautluak Traditional Council", one is granted to the "Atmautluak Village Council" and one is granted to the "Village of Atmautluak." It is presumed that these are all the same entity. However, this should be verified locally.

Summary. Atmautluak Limited, as landowner, has the authority to grant easements or other interests provided that such use does not conflict with previously granted interests.

Disclaimer: This report does not purport to insure, warrant or certify title. This report is not a legal opinion. The report is the result of a limited research effort as described above and was limited to recording office information that is available online. The report does not provide an opinion as to whether an interest would have to be obtained from the subsurface estate owner for a project of this matter as that is a legal matter.

Prepared by

Rick Elliott

Rick Elliott
Land Consultant for AE&E

October 30, 2012

Attachments: a/s

RIGHT-OF-WAY EASEMENT
FOR ORGANIZED VILLAGE OR MUNICIPALITY

This Agreement is entered into by and between Atmautluak, Ltd.
(Village or Municipality)
hereinafter referred to as grantor, and United Utilities, Inc., P.O. Box 4-2730, Anchorage, Alaska 99509, hereinafter referred to as grantee, for the purpose of granting an easement to United Utilities, Inc. for utility purposes.

1. Consideration and Grant. For $10.00 and other valuable consideration, the grantor hereby grants to the grantee and its successors or assigns, a 10 foot wide right-of-way easement across and for the purposes of this right-of-way easement the right to enter upon all the lands of the grantor located within the boundaries of the grantor in:

Sections	Townships	Ranges
ALL	T9N	R73W

Seward Meridian, Bethel Recording District

This right-of-way easement is granted to construct, reconstruct, operate and maintain on, above or under the above-described lands including upon, above or under all utility easements, public ways, streets, roads or highways upon said lands, a telephone line or system including telephone poles to cut and trim trees and shubbery that may interfere with or threaten to endanger the operation and maintenance of said right-of-way easement, line, poles or system and to license, permit or otherwise agree to the joint use or occupancy of said line, poles or system by any other person, firm or corporation for cable television, telephone, or electrification purposes.

2. Ownership of Equipment. The grantor agrees that all poles, wires, and other facilities, including all telephone equipment, installed on the above-described lands whether at the grantors expense or not shall remain the property of the grantee, removeable at the option of the grantee.

3. Ownership Covenant. The grantor covenants that the grantor is the owner of the above-described lands and is legally capable of granting the right-of-way.

4. Right-of-Way Easement Running With the Land. The right-of-way easement granted in this Agreement and the covenants, conditions, and terms of this Agreement shall constitute covenants to run with the above-described land, and shall be binding upon the grantor and grantee herein, and upon all other persons and parties claiming through the grantor or grantee, and for the benefit of and limitation upon all future owners of said land and premises.

5. Non-interference. The grantor covenants and agrees that the grantor shall not interfere, obstruct or otherwise endanger any line, pole or system constructed by the grantee or its licensee or permittee upon the above-described lands. The grantor covenants and agrees that the grantor shall not undertake any construction or alteration of any structure or other thing upon the above-described lands that would render the existing lines, poles or system of the grantee, its licensee or permittee to be in non-compliance with any applicable safety, construction or zoning codes.

Signed and agreed to this 18 day of October, 1982

GRANTEE: UNITED UTILITIES, INC.

By: [signature]

GRANTOR: Atmautluak, ~~Inc.~~ Ltd.

James A. Nicholia

STATE OF ALASKA)
) ss.
)

THIS IS TO CERTIFY that on the 17 day of Nov., 1982, at Alaska, Eleanor Stone, appeared before me and acknowledged that he is (they are) the Secretary of Atmautluak LTD and that he (they) properly executed the foregoing instrument, knew the contents thereof, and the same was executed freely and voluntarily for the uses and purposes therein mentioned.

WITNESS my hand and official seal the day and year in this document first above written.

Helen Nicholia
Notary Public in and for Alaska
My Commission Expires:

ATMAUTLUAK NOV 17 1982 BETHEL, AK

STATE OF ALASKA)
) ss.
)

THIS IS TO CERTIFY that on the 7th day of September, 1982, at Alaska, Lionel Satuna appeared before me and acknowledged that he is ~~(they are)~~ the President of United Utilities, Inc and that he ~~(they)~~ properly executed the foregoing instrument, knew the contents thereof, and the same was executed freely and voluntarily for the uses and purposes therein mentioned.

WITNESS my hand and official seal the day and year in this document first above written.

Cynthia L. Albrecht
Notary Public in and for Alaska
My Commission Expires: 6-22-86

Return recorded document to:
UNITED UTILITIES, INC.
Kathy Gallo
5450 A Street
Anchorage, AK 99518

93-476

RECORDED - ~~FILED~~ 18
BETHEL REC. DIST.
DATE 4-15 1993
TIME 10:21 A.M.
BY UUI

BOOK 70 PAGE 608

DEED OF EASEMENT
FOR
DEDICATED PARCEL 93-P-2

DEED OF EASEMENT MADE AND ENTERED INTO this 18 day of August, 1994 by Atmautluak, Ltd., hereinafter referred to as the Grantor, and Atmautluak Village Council, hereinafter referred to as the Grantee: That, in consideration of $1.00, the receipt of which is hereby acknowledged, the Grantor does hereby grant and convey unto the Grantee, its successors and assigns, a public utility easement, for the purpose of construction, maintenance, and on-going management of a sewage lift station force main and appurtenances located on the Grantor's property located within Section 19, 20, Township 9N, Range 73W, Seward Meridian, Alaska. The easement is shown in Exhibit 93-E-2 and labelled "Parcel 93-P-2", and is described as follows:

Beginning, for reference, at GP honey a 5/8-inch x 24-inch rebar set this survey and previously described in the lagoon easement Exhibit 93-E-1 Sheet #1 of 2; Thence, N65°46'58"E, 297.91 feet to the true point of beginning, a wood hub set flush with the ground; Thence, S53°15'48"E, 404.61 feet to the northerly boundary of Lot 9 of the Atmautluak Beach Front subdivision as recorded in the Bethel Recording District, File #81-20 dated October 29, 1981; Thence, continuing along the northerly boundary common to Lots 9 through 12 to the beginning of a curve concave to the south, having a radius of 302.98 feet and a length of 174.94 feet; Thence, along said curved boundary to the end of said curve to a common boundary separately Lots 14 and 15; Thence, continue S24°31'33"E, 752.69 feet to the beginning of a curve concave to the west having a radius of 214.92 feet and a length of 218.76 feet; Thence, along said curved boundary to the end of said curve; Thence, S21°42'08"E, 455.00 feet; Thence, S63°51'55"E, 243.69 feet; Thence, N89°02'16"E, 50.96 feet; Thence, N75°02'36"E, 76.87 feet; Thence, N89°44'23"E, 136.53 feet; Thence, N00°15'37"W, 10.00 feet; Thence, S89°44'23"W, 136.53 feet; Thence, S85°32'08"W, 125.55 feet; Thence, N67°29'41"W, 193.27 feet; Thence, N21°42'08"W, 436.26 feet; Thence, N13°28'11"E, 160.20 feet; Thence, N34°31'33"W, 631.09 feet; Thence, N43°00'35"W, 114.37 feet; Thence, N55°45'40"W, 113.97 feet; Thence, N65°32'11"W, 341.23 feet; Thence, N51°52'27"W, 750.92 feet; Thence, S09°49'44"W, 40.42 feet to the true point of beginning.

Said easement contains 3.13 acre(s), more or less.

QUALIFICATIONS:

THE GRANTOR DOES HEREBY AGREE to the foregoing on the condition that the Grantee(s) construct and maintain the site in a workmanlike manner, indemnify the landowners against liability for damages to life or property arising from the occupancy or use of the land by the Grantee(s). The easement is perpetual so long as the easement shall actually be used for the purpose specified and that the easement may be terminated in whole or in part by the Grantor(s) if non-use of the easement for the specified purpose exists for a consecutive two year period.

BOOK 10 PAGE 609

Parcel 93-P-2 - Atmautluak, Ltd.

CERTIFICATION:

IN WITNESS WHEREOF, the parties have executed this instrument at Atmautluak, Alaska.

By: Richard Pavilla	Grantor	Gen. Del.
Vice-Chairman	Title	Atmautluak, Ak — Address
By: Mary E. Tryk	Grantor	Gen. Del.
Secretary	Title	Atmautluak, Ak — Address
By: Alexie Pavilla	Grantee	gen. Del.
President	Title	Atmautluak, Ak — Address
By: Joshua Nick	Grantee	gen. Del.
Secretary	Title	Atmautluak, Ak — Address

STATE OF ALASKA
____ JUDICIAL DISTRICT

THIS IS TO CERTIFY THAT ON THIS 7 day of August, 1994, before me the undersigned Notary Public in and for the State of Alaska, duly commissioned and sworn, personally appeared the above signatory to me known to be the individual described in and who executed the above and foregoing instrument in the capacity as stated therein and acknowledged to me that he/she signed and sealed the same freely and voluntarily for the uses and purposes therein mentioned.

WITNESS, my hand and official seal the day and year this certificate first above written.

NOTARY PUBLIC FOR ALASKA

My commission expires: 8-25-97

_____ Recording District

Date Recorded _____

Return To:

ATTN:
Public Health Service
Office of Environmental Health and Engineering
222 W. 8th Avenue, #65
Anchorage, Alaska 99513-7561

BOOK 20 PAGE 610

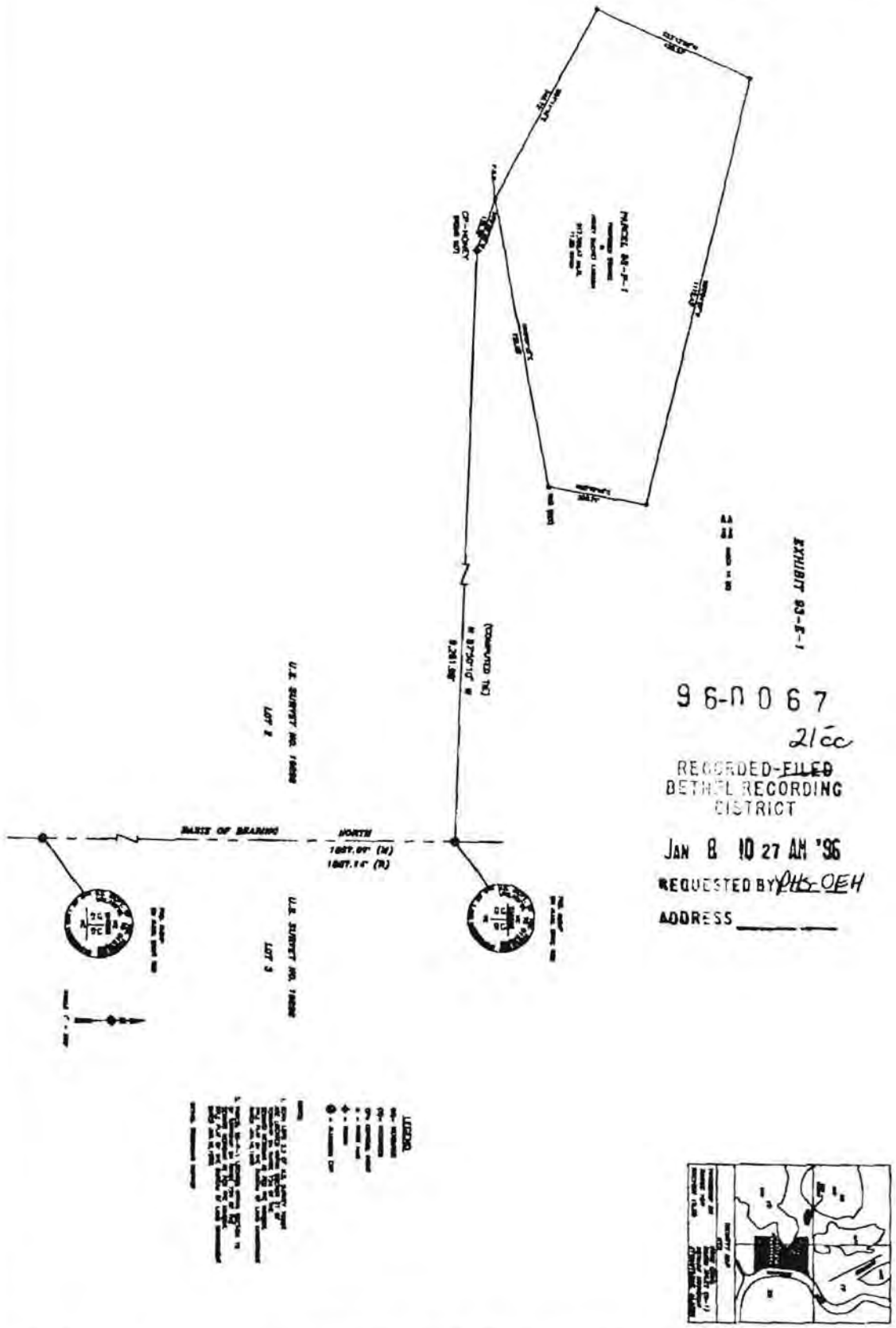

EXHIBIT 93-E-1

96-0067

21cc

RECORDED-~~FILED~~
BETHEL RECORDING
DISTRICT

JAN 8 10 27 AM '96

REQUESTED BY PHS-OEH

ADDRESS _____

SHEET R-1 OF 2		ATMAUTLUK, ALASKA HONEYBUCKET/SEWAGE LAGOON EASEMENT PUBLIC LAW 86-121 PROJECT	INDIAN HEALTH SERVICE · PHS · 1955	U.S. DEPARTMENT OF HEALTH & HUMAN SERVICES PUBLIC HEALTH SERVICE INDIAN HEALTH SERVICE DIVISION OF SANITATION FACILITIES OFFICE OF ENVIRONMENTAL HEALTH AND ENGINEERING ALASKA AREA NATIVE HEALTH SERVICE 5625 TUDOR CENTRE DRIVE ANCHORAGE, ALASKA 99508-5897 (907) 271-4150	DATE	REVISIONS	INITIALS
		DRAWN BY: K. LAUTERBACH DATE: 18 NOV. 1993					
		FILE NAME: ATM-E-1 PLOT SCALE: 1"=200'					

2002-001834-0
Recording Dist: 402 - Bethel
11/29/2002 11:04 AM Pages: 1 of 7
ALASKA

CC

EASEMENT AGREEMENT

between

Atmautluak Limited

and

Atmautluak Traditional Council

for Electrical Power System

in

Atmautluak, Alaska

November 19, 2002

THIS COVER SHEET HAS BEEN ADDED TO THIS DOCUMENT TO PROVIDE SPACE FOR RECORDING DATA. THIS COVER SHEET APPEARS AS THE FIRST PAGE OF THE DOCUMENT IN THE OFFICIAL PUBLIC RECORD.

DO NOT DETACH

Filed for record at request of:
Rick Elliott

After recording, mail to:
Rick Elliott
5458 Cape Seville Dr.
Anchorage, AK 99516

EASEMENT AGREEMENT

This Agreement is entered by and between Atmautluak Limited.whose address is P.O.Box 6548.Atmautluak.Alaska 99559.hereinafter referred to as the Grantor and the Atmautluak Traditional Council.whose address is P.O.Box 6568.Atmautluak.Alaska 99559.hereinafter referred to as the Grantee.for the purpose of granting an easement to the Atmautluak Traditional Council for the electrical system purposes.

1. Consideration and Grant: For $ 1.00 and other valuable consideration received.the Grantor hereby grants to the Grantee and its successors or assigns.a 15 foot easement across the lands of the Grantor located within the boundaries of the following described land:Section 20.Township 9 North.Range 73 West.Seward Meridian.The approximate location of the utility easement is shown on the attached Appendix A.(section 20 is highlighted with red ink)

2. Purpose: This Easement is granted to construct.reconstruct.operate and maintain on.above or under the above-described lands.including upon.above or under all utility easements.public ways.streets boardwalks.roads or highways upon said lands.an electrical system including poles for electrification purposes.

3. Ownership of Equipment:The Grantor agrees that all poles.wires. lines and other facilities or buildings installed on the above described lands.whether at Grantee's expense or not.shall remain the property of the Grantee.removal at the option of the Grantee.

4. Ownership Covenant: The Grantor covenants that the Grantor is the owner of the above described land and is legally capable of granting the easement.

5. Easement running with the land: The Easement granted in this agreement and the covenants.conditions and terms of this agreement shall constitute a covenant to run with the above described land.and shall be binding upon the Grantor and Grantee herein.and upon all other persons and parties claiming through the Grantor or Grantee.and for the benefit of and limitation upon all future owners of said land and premises.

6. Access and Clearing: The Grantor covenants and agrees that the Grantee.its licensees and its permittees have a right of reasonable ingress and egress to the easement for the electrical system purposes described above.and may trim or cut vegetation that may interfere with the electrical system purposes.

7. Non-Interference: The Grantor covenants and agrees that the Grantor shall not interfere.obstruct or otherwise endanger any line.pole or system constructed by the Grantee or its licensees or permittees upon the above described lands.The Grantor covenants and agrees that the Grantor shall not undertake or allow any construction or alteration of any structure or other thing above the described lands that would render the existing lines.poles or system of the Grantee.its licensee or permittees to be in non-compliance with any applicable safety. construction or zoning codes.

8. Survey: The parties further agree that either party shall have the right.at such party's sole cost and expense.to have a survey completed to more definitively establish the legal description of the property covered by this easement.If such survey is completed the parties agree to amend this easement to incorporate such survey to more definitive legal description.

This agreement is effective the date it is signed by both parties.

2 of 7
2002-001834-0

Attachments: Appendix A.Map(section 20 highlighted in red)
Appendix A-1 Corporation Resolution
Appendix A-2 Council Resolution

GRANTOR:
ATMAUTLUAK LIMITED
BY: Edward Nicholas
ITS: Chairman
DATE Nov 19, 02

ACKNOWLEDGEMENT

STATE OF ALASKA)
) SS.
3 JUDICIAL DISTRICT)

This is to certify that on 11/19/02, 2002 before me appeared Edward Nicholas, known by me to be the Chairman of Atmautluak Limited, who is authorized to sign this Easement Agreement and acknowledged voluntarily signing it on behalf of Atmautluak Limited as Grantor.

(SEAL)

Joshua Nick
Notary Public in the State of Alaska
My commission expires 12/28/02

GRANTEE:
ATMAUTLUAK TRADITIONAL COUNCIL
BY: Daniel A. Waska
ITS: President
DATE: November 19, 2002

ACKNOWLEDGEMENT

STATE OF ALASKA)
) SS.
3 JUDICIAL DISTRICT)

This is to certify that on 11/19/02, 2002, before me appeared Daniel Waska, known by me to be the President

of Atmautluak Traditional Council who is authorized to sign this Easement Agreement as shown by the attached resolution, and who executed this Easement Agreement and acknowledged voluntarily signing it on behalf of Atmautluak Traditional Council as Grantee.

(SEAL)

Joshua Nick
Notary Public for the State of Alaska
My commission expires 12/28/02

3 of 7
2002-001834-0

APPENDIX A.

Appendix A

95% COMPLETE 9-05-02
ATMAUTLUAK POWER PLANT
ATMAUTLUAK, ALASKA
CONCEPTUAL - 12.5KV ELECTRICAL
DISTRIBUTION SYSTEM
PROJECT LAYOUT PLAN - 95%
AEA/ACA
ALASKA
Dryden/LeRoux Inc.

APPENDIX A-1

ATMAUTLUAK LIMITED

RESOLUTION NO.2002 - 19

Whereas, Atmautluak Limited(hereinafter as CORPORATION) is the Native Village Corporation for the Village of Atmautluak, having incorporated and organized in accordance with section 8 of the Alaska Native Claims Settlement Act (hereinafter as ANCSA) and the laws of the State of Alaska, and

Whereas, The Atmautluak Traditional Council needs to secure an interest in land in order to meet site control requirements for an electrical system upgrade project, and

Whereas, The Board has reviewed this proposed Easement Agreement for the project area, and

Whereas, The Board believes the best interest of the CORPORATION would be served by entering into this Easement Agreement.

Now Therefore Be It Resolved that the Board of Directors of Atmautluak Limited hereby approves the attached Easement Agreement and that the Chairman of the Corporation is hereby authorized and empowered to sign said easement agreement on behalf of the corporation.

PASSED AND APPROVED THIS 19 DAY OF November, 2002 WITH A QUORUM OF 5.

Edward Nicholai, Chairman

Attested: Pauline S. Waska
Pauline Waska, Secretary

CERTIFICATE

The undersigned Pauline S. Waska, Secretary of Atmautluak Limited, an Alaska Corporation, does hereby certify that at a meeting of the Board of Directors of said corporation duly called and held on the 19 day of November, 2002 at which a quorum was present and voting, the foregoing resolution was duly adopted.

Dated this 19 day of November, 2002 at Atmautluak

ATMAUTLUAK TRADITIONAL COUNCIL
P.O. BOX 6568
ATMAUTLUAK, ALASKA 99559
PHONE # (907) 553-5610
FAX # (907) 553-5612

RESOLUTION NO. 02-35

WHEREAS, the Atmautluak Traditional Council needs to secure an interest in land in order to meet site control requirements for an electrical distribution system upgrade project in the Village of Atmautluak; and

WHEREAS, the Atmautluak Traditional Council has reviewed the proposed Easement Agreement which will serve as site control for this phase of the project; and

WHEREAS, the Atmautluak Traditional Council believes the best interests of the residents of Atmautluak would be served by entering into this Easement Agreement;

IT IS NOW RESOLVED by the Atmautluak Traditional Council that it approves the attached Easement Agreement, and that the Daniel A. Waska is hereby authorized and empowered to sign said Easement Agreement on behalf of the Atmautluak Traditional Council.

ADOPTED AND DATED this 12th day of November, 2002, at Atmautluak, Alaska.

The foregoing resolution was adopted at a duly convened meeting of Tribal Council on November 12, 2002.

By: Daniel A. Waska
(Chief or President)

Attest: Moses A. Pavilla Sr
(Secretary – Treasurer)

Appendix A-2

A L A S K A

2007-000070-0
Recording Dist: 402 - Bethel
1/22/2007 10:24 AM Pages: 1 of 4

cc

EASEMENT FOR
TEMPORARY ACCESS ACROSS PROPERTY

Parcel ATT 06-R24-P1

Grantor:
Atmautluak Limited
General Delivery
Atmautluak, Alaska 99559

Grantee:
Atmautluak Traditional Council
P.O. Box 6568
Atmautluak, Alaska 99559

I/WE Nicholai Evan of Atmautluak Limited, the owners of said **Parcel ATT 06-R24-P1**, hereinafter referred to as the Grantors, do hereby agree to allow Atmautluak Traditional Council, hereinafter referred to as the Grantees access across the said Parcel, in the location (s) indicated in the attached **Exhibit ATT 06-R24-P1,** for the purpose of access, construction and maintenance of a equipment storage and work camp site and for a period commencing the 15th day of March, 2006 and ending no later than midnight on Dec. 31st, 2010. That in consideration of $1.00, the receipt of which is hereby acknowledged, the Grantor does hereby grant and convey unto the Grantee, its successors and assigns, permission for the above activity. The activities will be limited to **Parcel ATT 06-R24-P1** as shown in **Exhibit ATT 06-R24-P1,** located within Section 20,Township 9 North, Range 73 West, Seward Meridian, Alaska, and more specifically described as follows:

Parcel ATT 06-R24-P1
Beginning, for reference, at Corner 2, Atmautluak Airport Boundary per Plat No. RS 97-1, Bethel Recording District, Feb. 20, 1997; Thence S 22°23'22" W, a distance of 123.36 feet to the True Point of Beginning; Thence N 81°00'00" W, a distance of 30.06 feet to the southeast corner of the National Guard Lease Site according to Lease No. DACA-5-95-23; Thence N 81°00'00" W, along the southerly boundary of said National Guard Lease Site, a distance of 169.94 feet; Thence S 34°07'47" W, a distance of 331.60 feet; Thence S 81°00'00" E, a distance of 200.00 feet; Thence N 32°47'44" E, a distance of 143.33 feet; Thence N 35°08'49" E, a distance of 188.35 feet to the True Point of Beginning.
Containing 1.37 ± acres

QUALIFICATIONS
Permission is granted subject to the conditions that the Grantee construct and/or maintain the aforesaid improvements and/or parcels in a workmanlike manner, indemnify the landowners against liability for damages to life or property arising from the occupancy or use of the land by the Grantee, and restore the lands as nearly as may be possible to their original condition upon completion of the stated activity in accordance with acceptable engineering and ethical practices. The easement is perpetual so long as the parcel shall actually be used for the purposes specified. The agreement may be terminated in whole or in part by the Grantor if use of the parcel for the specified purpose is completed, if the stated date of completion is reached, or if for any reason the Grantor requests in writing, to the representative of the Grantee on site, to vacate the parcel.

CERTIFICATION:

IN WITNESS WHEREOF, the parties have executed this instrument at Atmautluak, Alaska.

By: (Signature) Nicholai Evan
Grantor/Grantee

(Printed) NICHOLAI EVAN

LAND COMMITTEE
Title

ATMAUTLUAK ALASKA
Address

STATE OF ALASKA)
) ss:
4th JUDICIAL DISTRICT)

THIS IS TO CERTIFY THAT ON THIS 26th day of December, 2006 before me the undersigned Notary Public in and for the State of Alaska, duly commissioned and sworn, personally appeared Nicholai Evan to me known to be the individual described in and who executed the above and foregoing instrument in the capacity as stated therein and acknowledged to me that he/she signed and sealed the same freely and voluntarily for the uses and purposes therein mentioned.

JOSHUA NICK NOTARY PUBLIC STATE OF ALASKA

Joshua Nick
NOTARY PUBLIC FOR ALASKA

My commission expires 2-14-2007

2 of 4
2007-000070-0

W:\ATMAUTLUAK\ATT_ INFO\TITLE\DOCUMENTS\EASEMENTS\ATT-06-R24-P1.doc

CERTIFICATION:

IN WITNESS WHEREOF, the parties have executed this instrument at Atmautluak, , Alaska.

By: (Signature) Moses A. Pavilla Sr
Grantor/Grantee

(Printed) Moses A. Pavilla Sr

President
Title

Atmautluak, Ak 99559
Address

STATE OF ALASKA)
) ss:
4th JUDICIAL DISTRICT)

THIS IS TO CERTIFY THAT ON THIS 26st day of December, 2006, before me the undersigned Notary Public in and for the State of Alaska, duly commissioned and sworn, personally appeared Moses A. Pavilla Sr. to me known to be the individual described in and who executed the above and foregoing instrument in the capacity as stated therein and acknowledged to me that he/she signed and sealed the same freely and voluntarily for the uses and purposes therein mentioned.

JOSHUA NICK NOTARY PUBLIC STATE OF ALASKA

Joshua Nick
NOTARY PUBLIC FOR ALASKA

My commission expires 2-14-2007

Bethel Recording District

3 of 4
2007-000070-0

Return to: ATTN: Barbara J. Hosier
Alaska Native Tribal Health Consortium
1901 Bragaw Street, Suite 200
Anchorage, Alaska 99508-5997

W:\ATMAUTLUAK\ATT_ INFO\TITLE\DOCUMENTS\EASEMENTS\ATT-06-R24-P1.doc

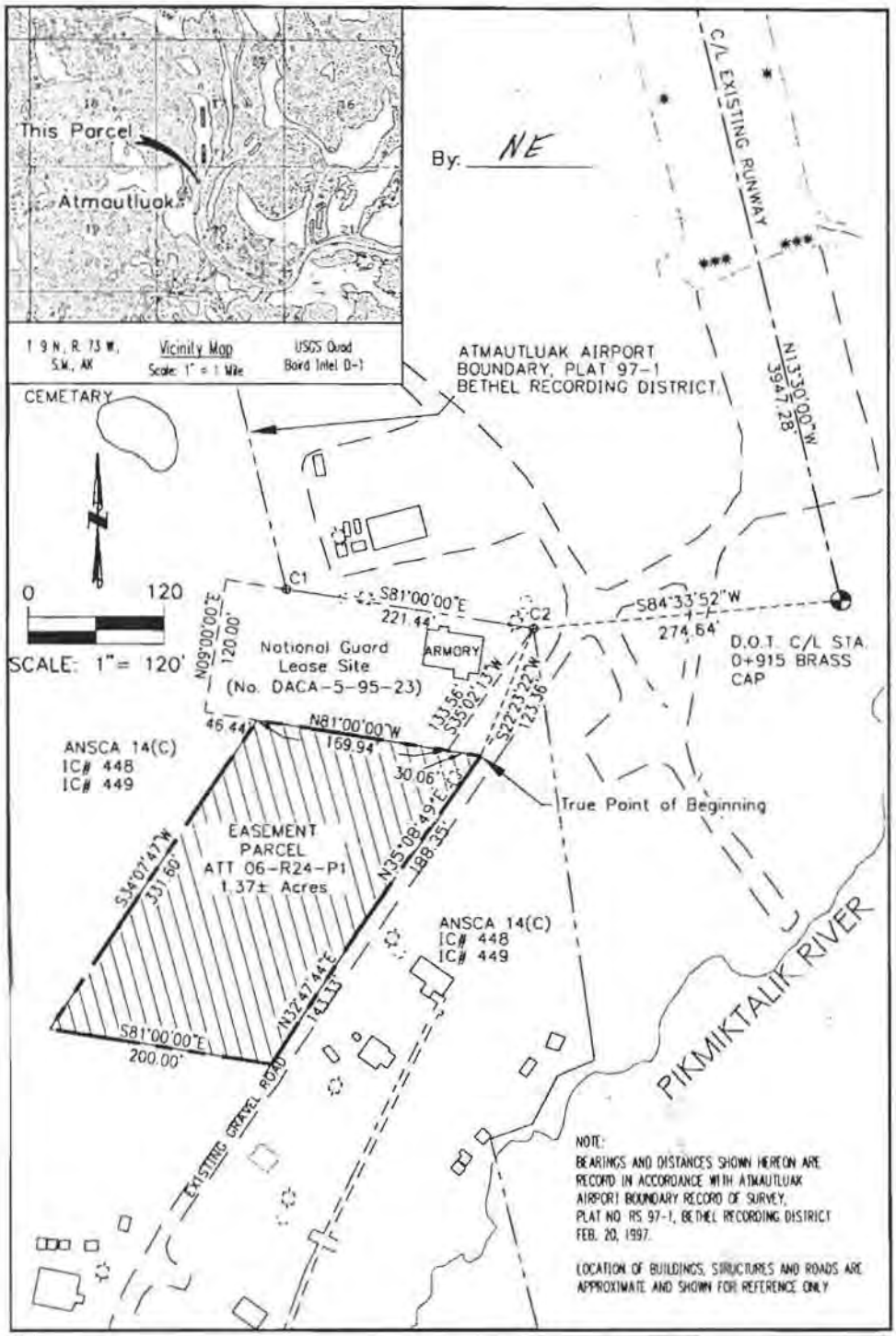

ATMAUTLUAK, ALASKA

Temporary-Access Easement
Exhibit ATT-06-R24-P1
Bethel Recording District

ALASKA NATIVE TRIBAL HEALTH CONSORTIUM

DIVISION OF ENVIRONMENTAL HEALTH AND ENGINEERING

1901 BRAGAW STREET, SUITE 200
ANCHORAGE, ALASKA, 99508-3440
(907) 729-3600

Project No.	AN 03-R24
Layout Name:	ATT06-R24-P1
Proj LS:	B. HOSIER LS-8623
Date:	01/18/06
Scale:	AS SHOWN
Drawn By:	KXL
Chkd By:	B. HOSIER

Page 1 of 1

W:\ATMAUTLUAK\ATT_ INFO\BH-Atmautluak_Master.dwg

4 of 4
2007-000070-0

A L A S K A
2010-001101-0
Recording Dist: 402 - Bethel
10/28/2010 11:23 AM Pages: 1 of 4

After Recording, Return To:
Association of Village Council Presidents
P.O. Box 219
Bethel, Alaska 99559

Bethel Recording District

AGREEMENT CREATING
BOARDWALK AND DOCK EASEMENT
Atmautluak, Alaska

This Agreement, made this 16th of September, 20 10, between Atmautluak Limited, hereinafter called "Grantor" and the Village of Atmautluak, hereinafter called "Grantee", for creation and conveyance of an easement on certain property owned by the Grantor and located in Atmautluak, Alaska.

The grantor does hereby agree to grant and convey to the Grantee, in perpetuity, an easement for construction and maintenance of a public boardwalk, dock and right-of-way over and across property owned by the Grantor and further described in the following and in Exhibit A, which is attached hereto and incorporated herein by reference.

> The easement is located within a portion of Government Lot 5, Section Twenty (20), Township Nine North (T9N), Range Seventy-Three West (R73W), Seward Meridian, located in the Bethel Recording District, Fourth Judicial District, State of Alaska.
>
> The easement is generally shown in Exhibit A, which is a design drawing showing the approximate proposed boardwalk location. The boardwalk will be field fit to the approximate locations shown in Exhibit A during construction. A record of survey will be completed and recorded after construction of the improvements has been completed. The record of survey will show the constructed location of improvements and easement.

The easements hereby conveyed to the Grantee includes the right to enter upon the above-described land and to grade, level, fill, drain, clear, build, maintain, repair, and rebuild a boardwalks and ramps as may be necessary, on, over and across the above-described land.

At its sole cost and expense, the Grantee shall purchase and maintain comprehensive general public liability insurance against all claims and liabilities arising from or caused by the construction, maintenance, use, occupancy, disuse, or neglect of the public boardwalk and dock on the above-described property, and all activities related and pertaining thereto. Upon request by the grantor, the grantee shall provide the Grantor with appropriate proof of insurance.

The easements hereby conveyed to the Grantee shall terminate upon any of the following occurrences: (1) if at any time the public boardwalk and dock is abandoned, or for any reason is not available for public use for a period of one year; (2) if the facility associated with this easement is not constructed within a period of three years: or, (3) if there is a default of breach of any term of this Agreement which is not cured by the Grantee within thirty days after notice of such non-performance or non-compliance by the Grantor.

Nothing in this Agreement shall be deemed or construed by the parties or by any third party to create the relationship of principal and agent, partnership, or joint venture, or to be any relationship other than grantor and grantee of an easement as stated herein.

This Agreement constitutes the entire agreement between the parties and may be modified or altered only in writing signed by the parties hereto or their authorized representatives.

Signature

BY: Billy Gilman Sr.
Printed Name, Title
Atmautluak Limited
P.O. Box 6548
Atmautluak, Alaska 99559

Signature

BY: Nicholai D. Pavilla Sr
Printed Name, Title
Village of Atmautluak
P.O. Box 6568
Atmautluak, Alaska 99559

2 of 4
2010-001101-0

STATE OF ALASKA)
)
_____ JUDICIAL DISTRICT)

THIS IS CERTIFY that on this 16th day of Sept., 2010, before me, the undersigned a Notary Public in and for the State of Alaska, duly commissioned and sworn as such, this day personally appeared Billy Gilman Sr, to me known and known to me to be the President of Atmautluak Limited, and that s/he acknowledged to me that s/he executed the foregoing free and voluntarily for the uses and purposes therein stated.

WITNESS my hand and official seal on the day and year last above written.

Notary Public in and for Alaska.

My commission expires:

ATMAUTLUAK AK 99559 SEP 16 2010 USPS

STATE OF ALASKA)
)
_____ JUDICIAL DISTRICT)

THIS IS CERTIFY that on this 16th day of Sept, 2010, before me, the undersigned a Notary Public in and for the State of Alaska, duly commissioned and sworn as such, this day personally appeared Nicholai Paulla Sr, to me known and known to me to be the Vice president of the Village of Atmautluak, and that s/he acknowledged to me that s/he executed the foregoing free and voluntarily for the uses and purposes therein stated.

WITNESS my hand and official seal on the day and year last above written.

Notary Public in and for Alaska.

My commission expires:

ATMAUTLUAK AK 99559 SEP 16 2010 USPS

3 of 4
2010-001101-0

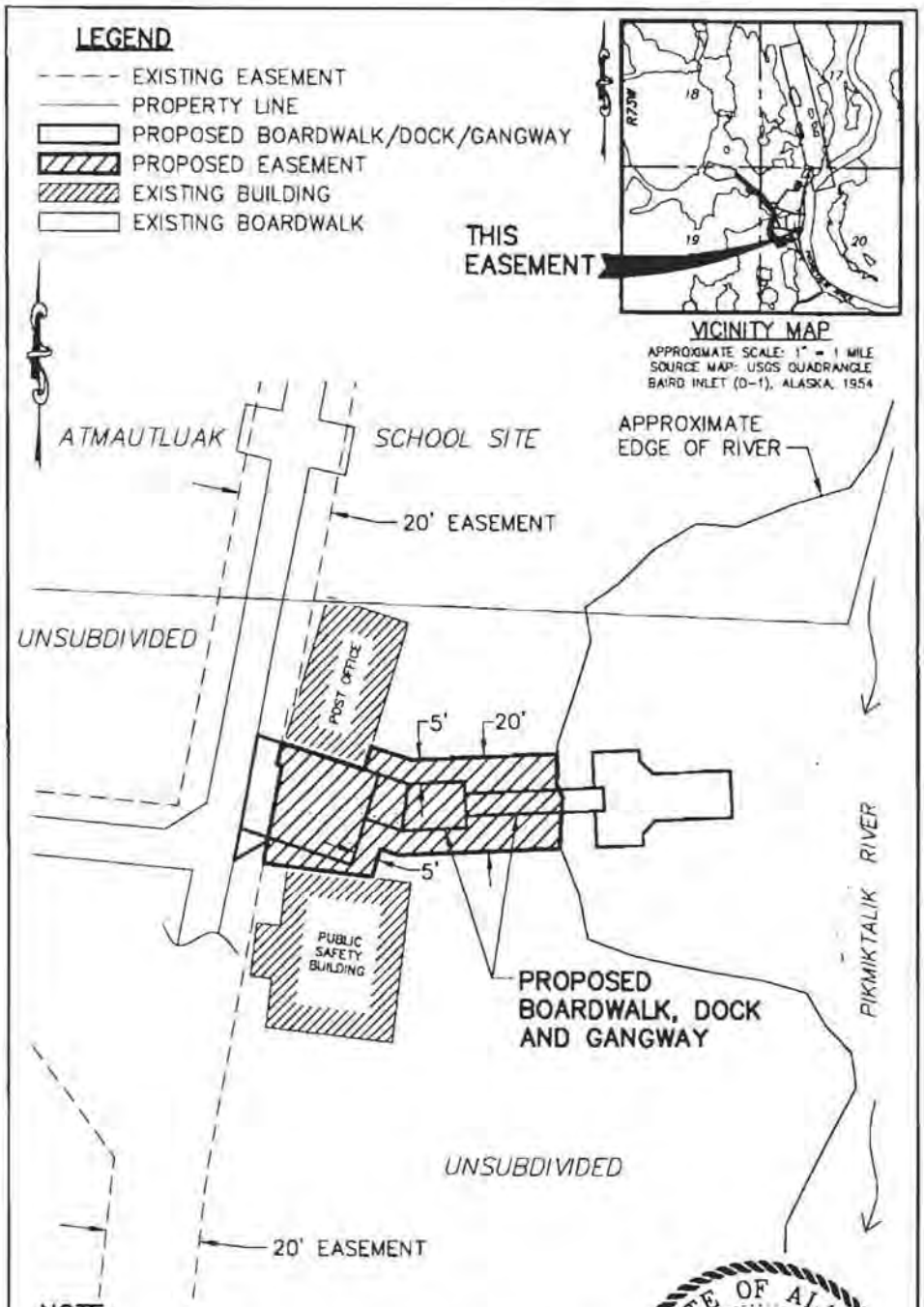

NOTE:
FINAL EASEMENT LOCATION WILL BE DOCUMENTED BY A RECORD OF SURVEY, RECORDED AS REQUIRED BY THE EASEMENT AGREEMENT.

GRAPHIC SCALE

30 0 15 30

1 inch = 30 ft.

STATE OF ALASKA
487H
Clark E. Kinney
LS-11780
9/2/2010
Registered Professional Land Surveyor
Exp. 12/31/2011

EXHIBIT A
SHEET 1 OF 1

BOARDWALK AND DOCK EASEMENT

A PORTION OF LAND WITHIN
UNSUBDIVIDED REMAINDER OF SECTION 20, T9N, R73W,
ATMAUTLUAK DOCK FACILITY
LOCATED WITHIN BETHEL RECORDING DISTRICT, ALASKA

RPKA
Rodney P. Kinney Associates, Inc.

BOOK 68 PAGE 798

F-14835-A

INTERIM CONVEYANCE

WHEREAS

Atmautluak Limited

is entitled to a conveyance pursuant to Sec. 14(f) and 22(j) of the Alaska Native Claims Settlement Act of December 18, 1971, as amended (43 U.S.C. 1601, 1613(a)) of the surface estate in the following described lands:

Seward Meridian Alaska, (Unsurveyed)

T. 9 N., R. 72 W.
Secs. 3 to 10, inclusive;
Secs. 15 to 22, inclusive;
Secs. 27, 28 and 29;
Sec. 30, excluding Native allotments F-14378 and F-17809 Parcel A;
Sec. 31;
Sec. 32, excluding Native allotment F-15484;
Sec. 33.

Containing approximately 14,298 acres.

T. 10 N., R. 72 W.
Secs. 3 to 10, inclusive;
Secs. 15 to 22, inclusive;
Secs. 27 to 34, inclusive.

Containing approximately 15,267 acres.

T. 11 N., R. 72 W.
Sec. 29;
Sec. 30, excluding U.S. Survey No. 2052 and Native allotments F-14220 and F-14980 Parcel B;
Secs. 31 to 34, inclusive.

Containing approximately 3,705 acres.

T. 8 N., R. 73 W.
Sec. 4, excluding Native allotments F-13999 and F-15617;
Sec. 5, excluding Native allotments F-17927 Parcel A and F-18896;
Sec. 6, excluding Native allotments F-15483 and F-17927 Parcel A;
Sec. 7, excluding Native allotment F-17927 Parcel A;
Sec. 8, excluding Native allotments F-17927 Parcel A and F-18896.

Containing approximately 2,597 acres.

T. 9 N., R. 73 W.
Sec. 1, excluding Native allotment F-18865;
Secs. 2 to 9, inclusive;
Sec. 10, excluding Native allotment F-17809 Parcel B;
Secs. 11, 12 and 13;
Sec. 14, excluding Native allotment F-14389 Parcel B;
Secs. 15 to 19, inclusive;
Sec. 20, excluding Native allotment F-13263;

STATE BUSINESS
NO FEE

Interim Conveyance No. 448

Date NOV 20 1991

Bureau of Land Management,
Alaska State Office
Anchorage, Alaska

8/1/95
DATE

I hereby certify that this reproduction is a copy of the official record on file in this office.

AUTHORIZED SIGNATURE

RETURN TO:
STATE OF ALASKA DOT/PF
P.O. BOX 196900
ANCHORAGE, AK 99519-6900
RIGHT OF WAY BRANCH

BOOK 68 PAGE 799

Sec. 21, excluding Native allotments F-13263, F-17810 and F-17811 Parcel A;
Sec. 22, excluding Native allotment F-18892;
Secs. 23 to 27, inclusive;
Secs. 28 and 29 excluding Native allotment F-13263;
Secs. 30 to 33, inclusive;
Sec. 34, excluding Native allotment F-17811 Parcel B;
Sec. 35, excluding Native allotments F-15483 and F-18885;
Sec. 36, excluding Native allotment F-15483.

Containing approximately 20,078 acres.

T. 10 N., R. 73 W.
Secs. 1 and 2 excluding Native allotment F-18867;
Sec. 3, excluding Native allotment F-16907 Parcel A;
Secs. 4 to 17, inclusive;
Sec. 18, excluding Native allotment F-14960 Parcel A;
Secs. 20 and 21;
Sec. 22, excluding Native allotment F-14239;
Secs. 23 to 28, inclusive;
Sec. 33;
Sec. 34, excluding Native allotment F-14256 Parcel A;
Sec. 35, excluding Native allotments F-14256 Parcel A, F-18897 and F-18898;
Sec. 36, excluding Native allotment F-14054.

Containing approximately 16,346 acres.

T. 11 N., R. 73 W.
Sec. 25, excluding Native allotments F-14220, F-14980 Parcel B and F-17958;
Secs. 26 to 36, inclusive.

Containing approximately 4,54[illegible] acres.

T. 8 N., R. 74 W.
Sec. 1, excluding Native allotments F-15483 and F-18885;
Sec. 2, excluding Native allotment F-15938;
Sec. 3;
Sec. 4, excluding Native allotments F-14252 Parcel B, F-17334 Parcel B and F-17923 Parcel A;
Sec. 9, excluding Native allotments F-14257 Parcel B, F-14962 Parcel D, F-15578 and F-17334 Parcel B;
Sec. 10, excluding Native allotment F-15940;
Sec. 11, excluding Native allotments F-15938, F-15939, F-15945 and F-17467 Parcel B;
Sec. 12;
Sec. 14, excluding Native allotments F-15939 and F-17467 Parcel B;
Sec. 15, excluding Native allotments F-025351, F-15940 and F-17467 Parcel B;
Sec. 16, excluding Native allotment F-15943;
Sec. 21;
Sec. 22, excluding Native allotment F-025351;
Sec. 23.

Containing approximately 5,305 acres.

Interim Conveyance No. 448
Date NOV 20 1981

Bureau of Land Management,
Alaska State Office
8/1/95 Anchorage, Alaska
DATE
I hereby certify that this reproduction is a copy of the official record on file in this office.
AUTHORIZED SIGNATURE

T. 11 N., R
Secs. 25 an

Containing

Aggregating

Excluded from th
the submerged lands b
Bureau of Land Manager
or could be used in c
Those water bodies ar
maps, the original of
file F-14835-EE.

NOW KNOW YE, tha
STATES OF AMERICA, un
estate in the land ab
estate with all the r
nances, of whatsoever
corporation, its succ

EXCEPTING AND RE
so granted:

1. The subsurfa
immunities,
accruing unt
Claims Settl
1601, 1613(f

2. Pursuant to
Settlement A
1616(b)), t
easement ide
maps attache
found in ca
United State
Federal, St
The followin
type of ase
listed are p

25
Ti
tr
tw
al
Gr

(EIN 1
trail,
in Sec.
southea
uses al
five (2
use wil

THE GRANT OF THE

1. Issuance of
tion of the

Interim Conveyance No.
Date NOV

BOOK 68 PAGE 800

F-14835-A

T. 11 N., R. 74 W.
Secs. 25 and 36, excluding Native allotment F-13387.

Containing approximately 875 acres.

Aggregating approximately 83,013 acres.

Excluded from the above-described lands herein conveyed are the submerged lands beneath all water bodies determined by the Bureau of Land Management to be navigable because they have been or could be used in connection with travel, trade and commerce. Those water bodies are identified on the attached navigability maps, the original of which will be found in the easement case file F-14835-EE.

NOW KNOW YE, that there is, therefore, granted by the UNITED STATES OF AMERICA, unto the above-named corporation the surface estate in the land above-described, TO HAVE AND TO HOLD the said estate with all the rights, privileges, immunities, and appurtenances, of whatsoever nature, thereunto belonging, unto the said corporation, its successors and assigns, forever:

EXCEPTING AND RESERVING TO THE UNITED STATES from the lands so granted:

1. The subsurface estate therein, and all rights, privileges, immunities, and appurtenances, of whatsoever nature, accruing unto said estate pursuant to the Alaska Native Claims Settlement Act of December 18, 1971 (43 U.S.C. 1601, 1613(f)); and

2. Pursuant to Sec. 17(b) of the Alaska Native Claims Settlement Act of December 18, 1971 (43 U.S.C. 1601, 1616(b)), the following public easement, referenced by easement identification number (EIN) on the easement maps attached to this document, copies of which will be found in case file F-14835-EE, is reserved to the United States. All easements are subject to applicable Federal, State, or Municipal corporation regulation. The following is a listing of uses allowed for each type of easement. Any uses which are not specifically listed are prohibited.

   25 Foot Trail - The uses allowed on a twenty-five (25) foot wide trail easement are: travel by foot, dogsled, animals, snowmobiles, two- and three-wheel vehicles, and small all-terrain vehicles (less than 3,000 lbs. Gross Vehicle Weight (GVW)).

   (EIN 1 D1, D9) An easement for an existing access trail, twenty-five (25) feet in width, from Kasiglak in Sec. 2, T. 9 N., R. 75 W., Seward Meridian, southeasterly to Atmautluak and on to Bethel. The uses allowed are those listed above for a twenty-five (25) foot wide trail easement. The season of use will be limited to winter.

THE GRANT OF THE ABOVE-DESCRIBED LANDS SHALL BE SUBJECT TO:

1. Issuance of a patent confirming the boundary description of the unsurveyed lands hereinabove granted after

Interim Conveyance No. 448

Date NOV 28 1984

Bureau of Land Management
Alaska State Office
8/1/95 Anchorage, Alaska
DATE
I hereby certify that this reproduction is a copy of the official record on file in this office.
AUTHORIZED SIGNATURE

F-14835-A

approval and filing by the Bureau of Land Management of the official plat of survey covering such lands;

2. Valid existing rights therein, if any, including but not limited to those created by any lease (including a lease issued under Sec. 6(g) of the Alaska Statehood Act of July 7, 1958 (48 U.S.C. Ch. 2, Sec. 6(g)), contract, permit, right-of-way, or easement, and the right of the lessee, contractee, permittee, or grantee to the complete enjoyment of all rights, privileges, and benefits thereby granted to him. Further, pursuant to Sec. 17(b)(2) of the Alaska Native Claims Settlement Act of December 18, 1971 (43 U.S.C. 1601, 1616(b)(2)) (ANCSA), any valid existing right recognized by ANCSA shall continue to have whatever right of access as is now provided for under existing law;

3. Requirements of Sec. 14(c) of the Alaska Native Claims Settlement Act of December 18, 1971 (43 U.S.C. 1601, 1613(c)), that the grantee hereunder convey those portions, if any, of the lands hereinabove granted, as are prescribed in said section; and

4. Airport lease AA-9030 containing approximately 116 acres, lying within Secs. 17 and 20, T. 3 N., R. 73 W., Seward Meridian, issued to the State of Alaska, Department of Public Works, Division of Aviation (now the Department of Transportation and Public Facilities), under the provisions of the act of May 24, 1928, as amended, (49 U.S.C. 211-214).

IN WITNESS WHEREOF, the undersigned authorized officer of the Bureau of Land Management has, in the name of the United States, set his hand and caused the seal of the Bureau to be hereunto affixed on this 20th day of November, 1981, in Anchorage, Alaska.

UNITED STATES OF AMERICA

Assistant to the State Director
for Conveyance Management

Interim Conveyance No. 448

Date NOV 20 1981

Bureau of Land Management,
Alaska State Office
8/1/95 Anchorage, Alaska
DATE

I hereby certify that this reproduction is a copy of the official record on file in this office.

AUTHORIZED SIGNATURE

BOOK 68 PAGE 802

Bureau of Land Management of
covering such lands;

in, if any, including but
d by any lease (including a
) of the Alaska Statehood
.C. Ch. 2, Sec. 6(g)),
way, or easement, and the
tee, permittee, or grantee
all rights, privileges,
d to him. Further, pursuant
ska Native Claims Settlement
3 U.S.C. 1601, 1616(b)(2))
right recognized by ANCSA
ever right of access as is
ting law;

of the Alaska Native Claims
8, 1971 (43 U.S.C. 1601,
hereunder convey those
nds hereinabove granted, as
ion; and

nimw approximately 114 acres,
, T. 3 N., R. 73 W., Seward
e of Alaska, Department of
ation (now the Department
Facilities), under the
24, 1928, as amended,

ed authorized officer of
the name of the United
al of the Bureau to be
ovember, 1981, in Anchorage,

TATES OF AMERICA

Richard D Amold

to the State Director
eyance Management

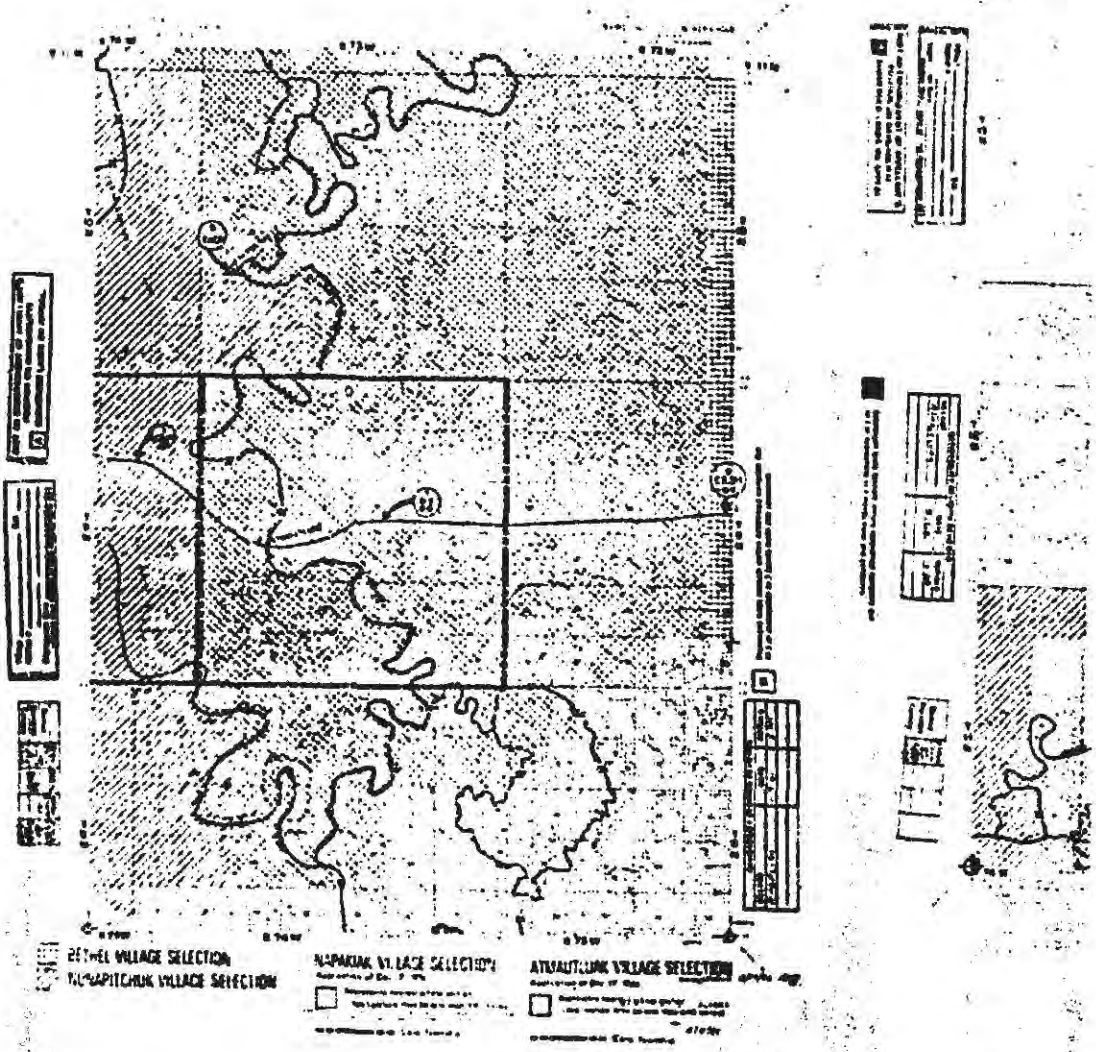

Bureau of Land Management,
Alaska State Office
8/1/95 Anchorage, Alaska
DATE
I hereby certify that this reproduction is a copy of the official record on file in this office.

AUTHORIZED SIGNATURE

448

NOV 20 1981 Alaska State Office
Anchorage, Alaska
I hereby certify that this reproduction is a copy of the original record on file in this office.
Richard D Amold

POOR FILMING QUALITY

BOOK 68 PAGE 803

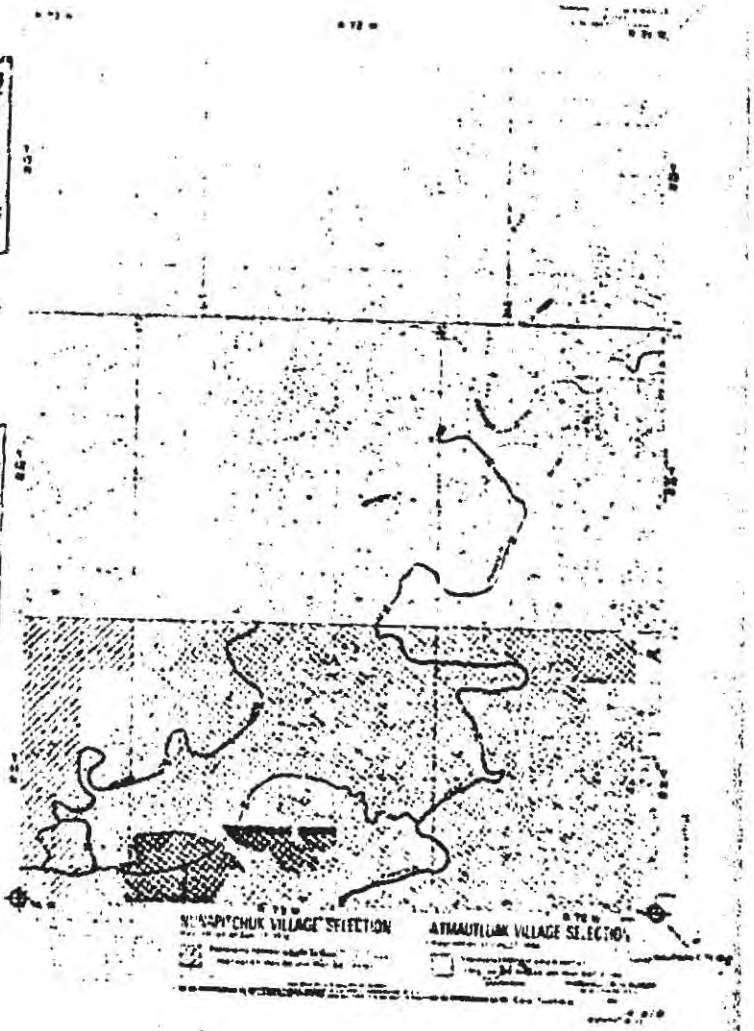

Bureau of Land Management,
Alaska State Office
5/1/95
DATE
Anchorage, Alaska
I hereby certify that this reproduction is a copy of the official record on file in this office.
AUTHORIZED SIGNATURE

448

NOV 29 1991 Alaska State Office
DATE Anchorage, Alaska
I hereby certify that this reproduction is a copy of the official record on file in this office.

POOR FILMING QUALITY

BOOK 68 PAGE 804

95-1548
NC

RECORDED-~~FILED~~
BETHEL RECORDING
DISTRICT

AUG 2 12 54 PM '95

REQUESTED BY AS/DOT

ADDRESS _____

APPENDIX D

ELECTRICAL LOAD DATA

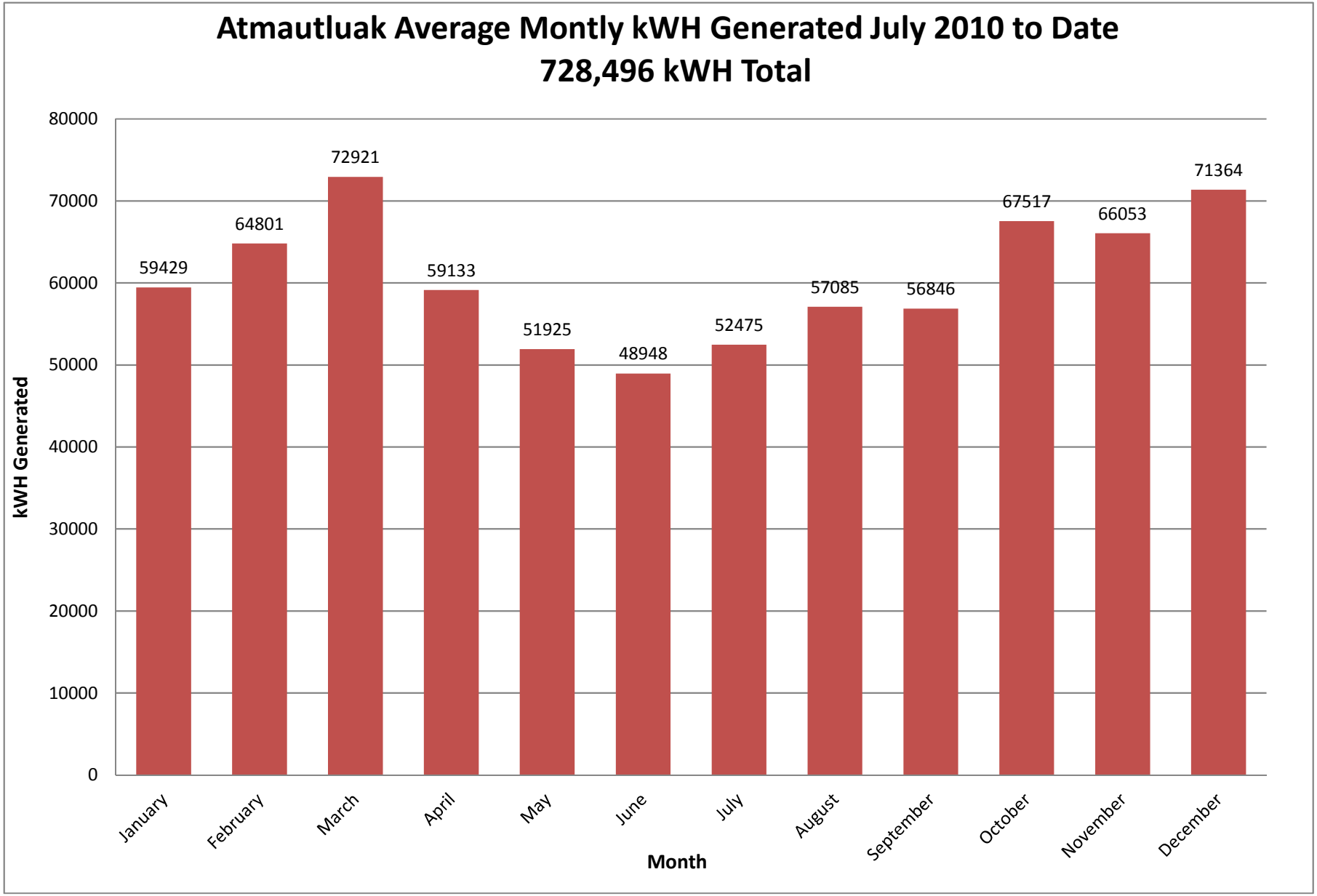
Atmautluak Average Montly kWH Generated July 2010 to Date
728,496 kWH Total
kWH Generated
80000
70000
60000
50000
40000
30000
20000
10000
0
59429
64801
72921
59133
51925
48948
52475
57085
56846
67517
66053
71364
January
February
March
April
May
June
July
August
September
October
November
December
Month

APPENDIX E

HEAT RECOVERY WORKSHEETS AND GRAPHS

RECOVERED HEAT UTILIZATION SIMULATION WORK SHEET.

Date: July 2013

Date: Nove **Atmautluak** **Est. Annual Fuel Savings (Gallons):8,292**

4	(2,476)	Annual Fuel 'Penaltly' for MJ Conversior
	96.4%	Percent fuel savings

Fuel heat value: 134000 Btu/gal (based on #1 arctic diesel fuel)

A	End User Option SEE NOTE 2

N	School? SEE NOTE 5	N	Wind? SEE NOTE 4

1 = Existing John Deere 6081
2 = New John Deere 6090 AFM MJ
3 = New John Deere 4045 AFM MJ
4 = Hybrid, 6081 May - Sept, 6090 others

Fuel Economy Estimates

6081	14.30	*kW/gal*
6090	13.20	*kW/gal*
4045	13.15	*kW/gal*

GENSET DATA - SEE NOTE 3

Heat rate at kw-load above	HYBRID	HYBRID	Btu/kwh
Heat rate at kw-load above	HYBRID	HYBRID	Btu/kwh
Heat rate at kw-load above	HYBRID	HYBRID	Btu/kwh
Heat rate at kw-load above	HYBRID	HYBRID	Btu/kwh
Heat rate at kw-load above	HYBRID	HYBRID	Btu/kwh
Heat rate at kw-load above	HYBRID	HYBRID	Btu/kwh
Heat rate at kw-load above	HYBRID	HYBRID	Btu/kwh
Heat rate at kw-load above	HYBRID	HYBRID	Btu/kwh
Heat rate at kw-load above	HYBRID	HYBRID	Btu/kwh
Heat rate at kw-load above	HYBRID	HYBRID	Btu/kwh
Heat rate at kw-load above	HYBRID	HYBRID	Btu/kwh

SYSTEM LOSS DATA:

Constant losses:			
Plant piping:	1218	Btu/hr.	60' of 3" insulated carbon pipe
Arctic piping:		Btu/hr.	See Exterior Piping below
Genset Eng. Preheat:	3412	Btu/hr.	Assume 1 kW lost for engine pre-heat
Total constant:	**4630**	Btu/hr.	
Variable losses:			
Exterior piping:	257	Btu/hr.xF	390', 2" @ 0.160; 1280', 2.5" @ 0.136; BTU/hr/°F
Plant heating:	0	Btu/hr.xF	Assume heat from generators keeps plant warm
Radiator losses:	50	Btu/hr.xF	Estimate based on 2 exterior radiators

GENERATION DATA: SEE NOTES 4&5

Kwh/month:		WIND	LKSD
January	59429	28272	14400
February	64801	51072	26880
March	72921	31992	29760
April	59133	34560	24800
May	51925	17856	0
June	48948	17280	14400
July	52475	14136	0
August	57085	12648	0
September	56846	10080	0
October	67517	19344	0
November	66053	30960	8880
December	71364	46128	29760
Totals:	728,496	314,328	148,880

WEATHER DATA:

HDD/Month:	Bethel
	1832
	1602
	1609
	1194
	742
	406
	299
	367
	589
	1083
	1425
	1777
Total:	12925

PCE Data - See Note 1

Month	kWh Gen	Fuel Used
July	52475	4033
August	57085	4176
September	56846	4266
October	67517	4626
November	66053	4585
December	71364	5441
January	59429	5176
February	64801	4795
March	72921	5270
April	59133	4305
May	51925	4054
June	48948	3606
Total:	728496	54331

NOTES:

1) kWH Generated & Fuel Used Based on most recent PCE data, see Sheet "PCE"
2) "A" All End Users Included
3) Heat rate of 7232 BTU/min* 60 min/127 kW Prime, 1800 rpm
3) Heat rate of 11498 BTU/min * 60 min / 202 kW Prime, 1800 rpm
4) No wind electrical production included
5) No School Electrical Usage Included

BUILDING DATA: SEE NOTE 2

Fuel use, gallons	Seasonal	Non-Seasonal	Boiler Efficiency	est'd gal's saved	Building in use, 1=yes, 0=no January	February	March	April	May	June	July	August	September	October	November	December	Oper. Months	Oper. HDD
U Warehou	500	0	85%	482	1	1	1	1	1	1	1	1	1	1	1	1	12	12926
Com Hall	1200	0	85%	1156	1	1	1	1	1	1	1	1	1	1	1	1	12	12926
Lim Store	1300	0	85%	1253	1	1	1	1	1	1	1	1	1	1	1	1	12	12926
Bingo/Post	1050	0	85%	1012	1	1	1	1	1	1	1	1	1	1	1	1	12	12926
Washetera	3555	1000	75%	4389	1	1	1	1	1	1	1	1	1	1	1	1	12	12926
Police Stati	0	0	85%	0	1	1	1	1	1	1	1	1	1	1	1	1	12	12926
Pump Hous	0	0	85%	0	1	1	1	1	0	0	0	0	1	1	1	1	8	11112
0	0	0	85%	0	1	1	1	1	1	1	1	1	1	1	1	1	12	12926
0	0	0	85%	0	1	1	1	1	1	1	1	1	1	1	1	1	12	12926
0	0	0	85%	0	1	1	1	1	1	1	1	1	1	1	1	1	12	12926
Total	7605	1000	**8605**	**8292**														

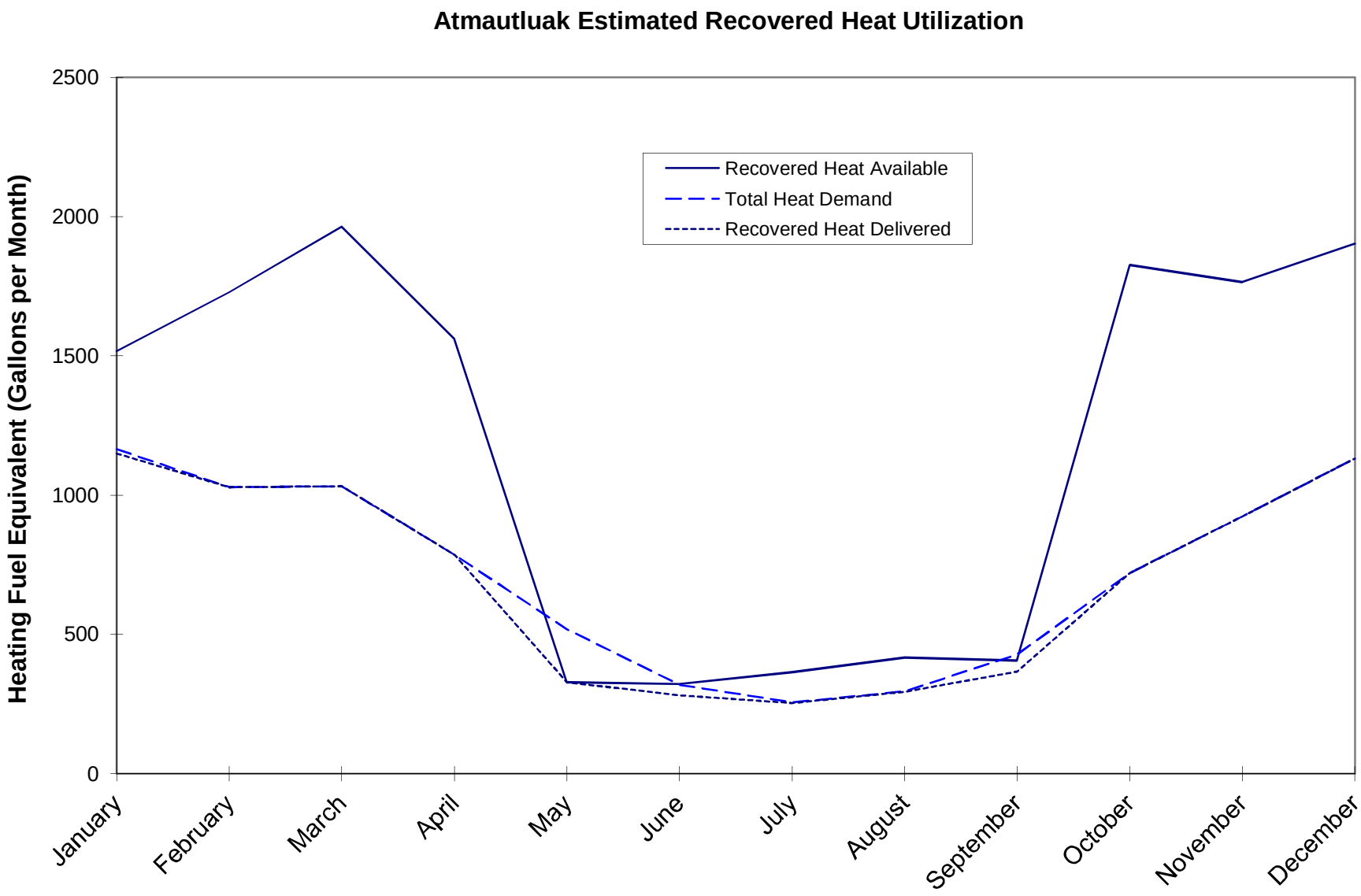
Atmautluak Estimated Recovered Heat Utilization
Heating Fuel Equivalent (Gallons per Month)
2500
2000
1500
1000
500
0
Recovered Heat Available
Total Heat Demand
Recovered Heat Delivered
January
February
March
April
May
June
July
August
September
October
November
December

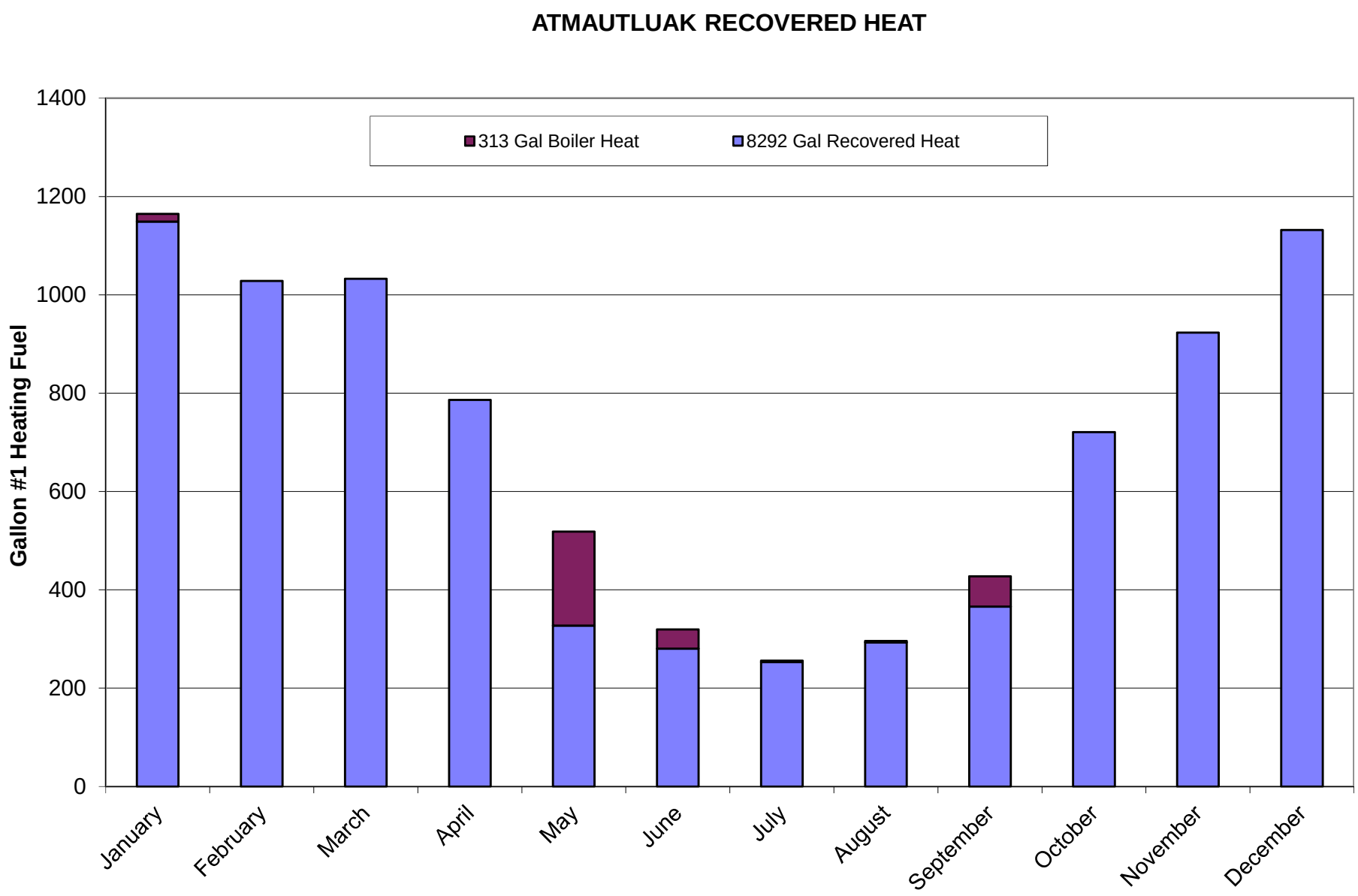
ATMAUTLUAK RECOVERED HEAT
313 Gal Boiler Heat
8292 Gal Recovered Heat
Gallon #1 Heating Fuel
1400
1200
1000
800
600
400
200
0
January
February
March
April
May
June
July
August
September
October
November
December

APPENDIX F

COMMUNITY CORRESPONDENCE

Alaska Energy and Engineering, Inc.
Mailing Address - P.O. Box 111405
Anchorage, AK 99511-1405
(907) 349-0100, (907) 349-8001 Fax

November 6, 2012

Ms. Lillian Pavilla
Atmautluak Limited
P.O. Box 6548
Atmautluak, AK 99559

Sent via fax to: 907 553-5420
(1 pages total)

Re: **Atmautluak Power Plant CDR – Geotech Site Visit**

Ms. Pavilla:

This letter is to inform you that a representative of Golder Associates will be in Atmautluak tomorrow (Wednesday, November 7, 2012, weather permitting) to perform a geotechnical evaluation in support of the Atmautluak Power Plant Concept Design Report.

This effort will consist primarily of probing the soils around and adjacent to the existing power plant site to determine the depth of thaw of the active layer. Manual probing will be performed in conjunction with the use of hand held electric/battery operated drills/equipment to break through the frozen surface layer. No heavy equipment is anticipated to be needed for this effort.

We look forward to working with you and the community of Atmautluak on the development of this project. If you have any questions please call (907) 349-0100, or fax to (907) 349-8001.

Sincerely,

Alaska Energy and Engineering, Inc.

for Bill Price
Project Engineer

cc: James Nicholai, President, Village of Atmautluak, fax (907) 553-5612
Arthur Dull, Manager, Atmautluak Tribal Utilities, fax (907) 553-5429
Rick Mithcells, Sr. Geotechnical Consultant, Golder Associates
Karl Reiche, Project Manager, AEA/Rural Energy Group
Alan Fetters, AEA/Rural Energy Group

Broadcast Report

Date/Time	11-06-2012	06:35:34 p.m.	Transmit Header Text	
Local ID 1	907 349 8001		Local Name 1	ALASKA ENERGY & ENGINEERING
Local ID 2			Local Name 2	

This document : Confirmed
(reduced sample and details below)
Document size : 8.5"x11"

Alaska Energy and Engineering, Inc.
Mailing Address - P.O. Box 111405
Anchorage, AK 99511-1405
(907) 349-0100, (907) 349-8001 Fax

November 6, 2012

Ms. Lillian Pavilla
Atmautluak Limited
P.O. Box 6548
Atmautluak, AK 99559

Sent via fax to: 907 553-5420
(1 pages total)

Re: **Atmautluak Power Plant CDR – Geotech Site Visit**

Ms. Pavilla:

This letter is to inform you that a representative of Golder Associates will be in Atmautluak tomorrow (Wednesday, November 7, 2012, weather permitting) to perform a geotechnical evaluation in support of the Atmautluak Power Plant Concept Design Report.

This effort will consist primarily of probing the soils around and adjacent to the existing power plant site to determine the depth of thaw of the active layer. Manual probing will be performed in conjunction with the use of hand held electric/battery operated drills/equipment to break through the frozen surface layer. No heavy equipment is anticipated to be needed for this effort.

We look forward to working with you and the community of Atmautluak on the development of this project. If you have any questions please call (907) 349-0100, or fax to (907) 349-8001.

Sincerely,

Alaska Energy and Engineering, Inc.

for Bill Price
Project Engineer

cc: James Nicholai, President, Village of Atmautluak, fax (907) 553-5612
Arthur Dull, Manager, Atmautluak Tribal Utilities, fax (907) 553-5429
Rick Mithcells, Sr. Geotechnical Consultant, Golder Associates
Karl Reiche, Project Manager, AEA/Rural Energy Group
Alan Fetters, AEA/Rural Energy Group

Total Pages Scanned : 1 Total Pages Confirmed : 3

No.	Job	Remote Station	Start Time	Duration	Pages	Line	Mode	Job Type	Results
01	102	9075535429	06:28:23 p.m. 11-06-2012	00:02:09	1/1	1	EC	HS	CP12000
002	102	9075535612	06:28:23 p.m. 11-06-2012	00:00:17	1/1	1	EC	HS	CP19200
003	102	9075535420	06:28:23 p.m. 11-06-2012	00:00:34	1/1	1	EC	HS	CP14400

Atmautluak Traditional Council

P.O. Box 6568
Atmautluak, Alaska 99559
Ph (907) 553-5610 Fax 553-5612
atmautluaktc@hughes.net

FAX

To: Bill Price
From: Chris Rose
Fax: 907-349-8001
Pages: 2
Phone:
Date: 11-02-12
Re: Fuel History
cc:

__Urgent ✓For Review __Please Comment __Please Reply __Please Recycle

*Comments

Attn. Bill Price @ AEA

This may contain information which is privileged and confidential. It is intended for the use of the individual or facility to which it is addressed. If this has been transmitted to you in error, please notify us as soon as possible by telephone and destroy the document(s) properly. Any dissemination, distribution or copying of this communication is prohibited.

Atmautluak, AK Water Plant Fuel Consumption

2011		2012	
DATE:	GALLONS:	DATE:	GALLONS:
01-19-11	200GAL.	01-06-12	200GAL.
02-02-11	200GAL.	01-16-12	200GAL.
02-14-11	200GAL.	01-26-12	200GAL.
02-28-11	200GAL.	02-06-12	200GAL.
03-11-11	200GAL.	02-16-12	200GAL.
03-24-11	200GAL.	03-02-12	200GAL.
03-31-11	200GAL.	03-12-12	150GAL.
04-19-11	200GAL.	03-26-12	200GAL.
05-06-11	200GAL.	04-02-12	200GAL.
06-17-11	200GAL.	04-14-12	200GAL.
07-11-11	55GAL.	05-07-12	200GAL.
07-15-11	200GAL.	05-22-12	200GAL.
07-25-11	200GAL.	06-13-12	200GAL.
08-18-11	200GAL.	07-03-12	200GAL.
09-02-11	200GAL.	07-21-12	200GAL.
09-21-11	200GAL.	09-14-12	200GAL.
10-07-11	200GAL.	10-18-12	200GAL.
10-24-11	200GAL.	10-27-12	200GAL.
11-01-11	200GAL.		
11-14-11	200GAL.		
11-28-11	200GAL.		
12-16-11	200GAL.		
12-26-11	200GAL.		

4455

FAX COVER SHEET

ATMAUTLUAK LIMITED
P.O.BOX 6548
ATMAUTLUAK,ALASKA 99559

PHONE NO. 907-553-5428
FAX NO. 907-553-5420

SEND TO	
Company name: Alaska Energy & Engineering, Inc.	From: Lillian
Attention: Bill Price	Date: 11-1-12
Office location: PO BOX 111405, Anch, Ak	Office location: Atmautluak Limited
Fax number: (907) 349-8001	Phone number: (907) 553-5428

☐ Urgent ☐ Reply ASAP ☐ Please comment ☐ Please review ☐ For your information

Total pages, including cover: 4

COMMENTS

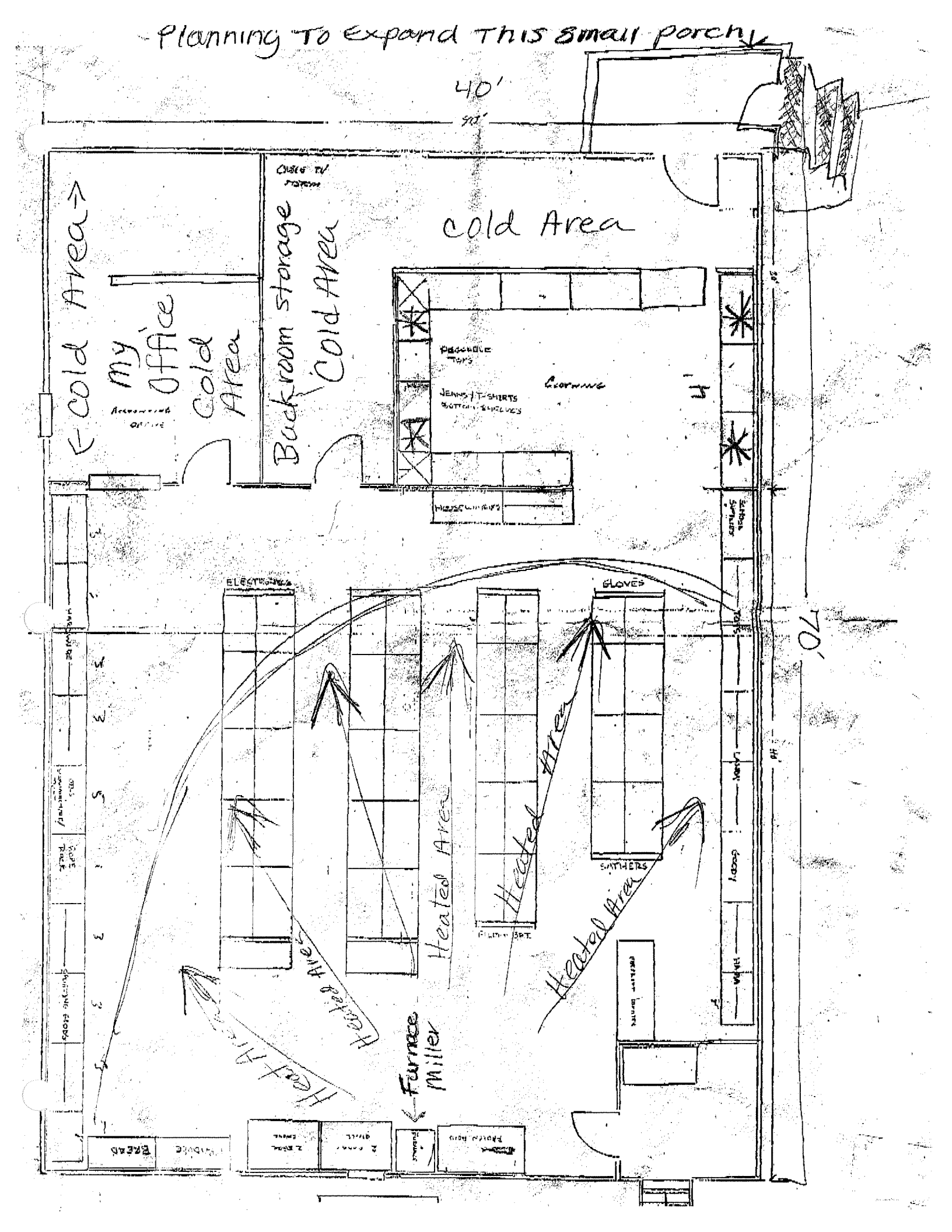
Planning To Expand This Small porch
40'
70'
Cold Area
Cold Area
My Office
Cold Area
Backroom storage
Cold Area
Clothing
JEANS / T-SHIRTS
ELECTRONICS
GLOVES
SMITHERS
Heated Area
Heated Area
Heated Area
Heated Area
Furnace
Miller

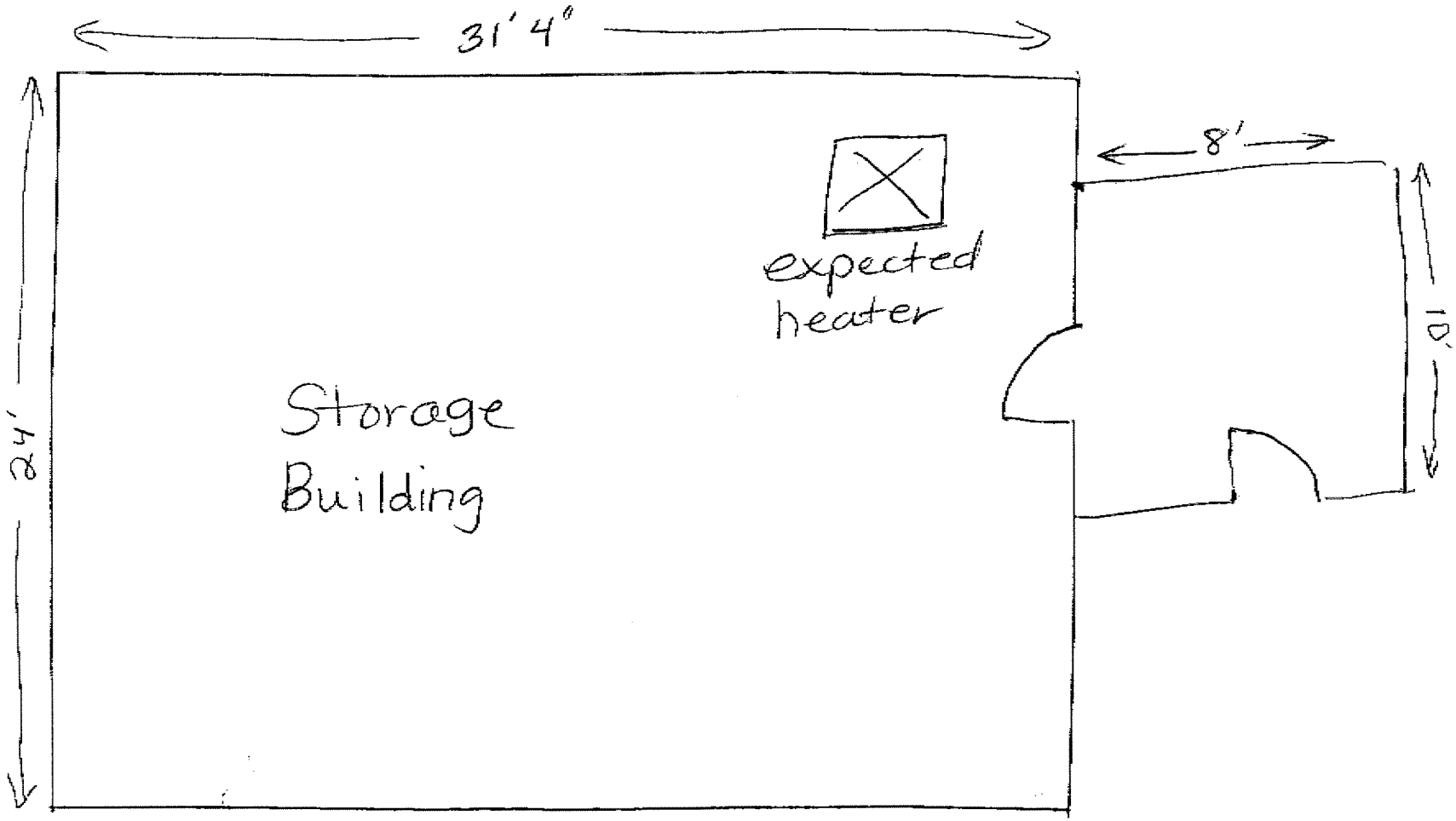

* Miller Furnace *
Oil Fan

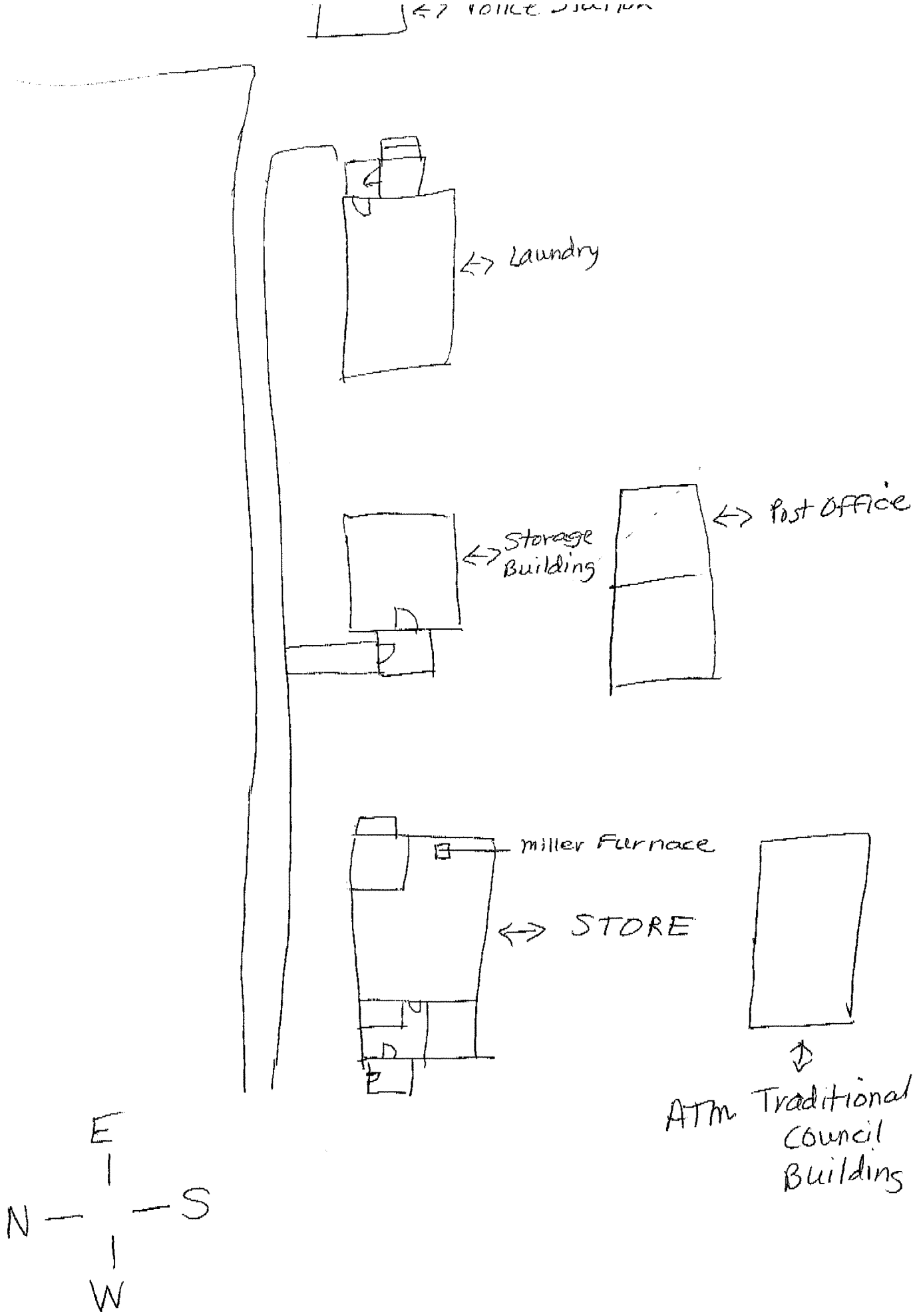
Laundry
Storage Building
Post Office
miller Furnace
STORE
ATM
Traditional Council Building
E
N
S
W

Alaska Energy and Engineering, Inc.
Mailing Address - P.O. Box 111405
Anchorage, AK 99511-1405
(907) 349-0100,
(907) 349-8001 Fax

Gray building total:
820 gallons

Blue Building total:
689.2 gallons

Jail building total:
190 gallons

Post office total:
263 gallons

BLUE

Sent via fax to: 907 553-5420
(3 pages total)

Recovery Concept Design Report

nder authorization of the AEA/Rural Energy
report (CDR) for the community of Atmautluak.
l energy projects for your community, including
ind power generation and electric distribution

T
n
g
ed power plant with heat recovery capability to
distribution maintenance, and potential power
wind. If funded for construction, the AEA/REG has a history of administering similar projects on a "modified" force-account basis. Force-account construction involves the owner/grantee, in this case likely the Native Village of Atmautluak, acting as the employer and utilizing local labor to the maximum extent practical.

To complete this report, we request the following items:

1. The most recent 24 months (2011 & 2012) fuel use records for the washeteria, community hall, Store, bingo hall/post office and Police Station.

2. List any planned projects that may affect fuel consumption such as additional housing, water and sewer expansion, school expansion, new community facilities, etc.

3. Status of local labor pool (please fill out attached list).

4. A list of locally available heavy equipment and information regarding condition (please fill out attached list).

We look forward to working with you and the community of Atmautluak on this project. If you have any questions please call (907) 349-0100, or fax to (907) 349-8001.

Sincerely,

Alaska Energy and Engineering, Inc.

Bill Price
Project Engineer

cc: James Nicholai, President, Village of Atmautluak, fax (907) 553.5612
Karl Reiche, Project Manager, AEA/Rural Energy Group
Steve Stassel, Alaska Energy and Engineering

FAX COVER SHEET

ATMAUTLUAK LIMITED
P.O.BOX 6548
ATMAUTLUAK,ALASKA 99559

PHONE NO. 907-553-5428
FAX NO. 907-553-5420

SEND TO	
Company name: Alaska Energy + Engineering, Inc	From: Lillian
Attention: Bill Price	Date: 10-31-2012
Office location: P.O.BOX 111405, Anch. AK	Office location: Atmautluak Limited
Fax number: (907) 349-8001	Phone number: 907 553-5428

☐ Urgent ☐ Reply ASAP ☐ Please comment ☐ Please review ☒ For your Information

Total pages, including cover: 2

COMMENTS

National® Brand 45-604 Eye-Ease® 45-304 2-Pack Made in USA

Atmautluak Limited

Record on Heating Fuel used in the past 2-years

P.O. BOX 6548
Atmautluak, AK 99559

NOV. 2010 to Oct. 2012

Prepared By: Initials Date
Approved By:

	DATE	Description	1 Price of HF	2	3	4 TOTAL IN Gallons
1						
2	11-25-10	60 gal stove oil	5.40	324.00		60
3	12-2-10	60 gal " "	5.40	324.00	60	120
4	12-28-10	45 gal " "	5.40	243.00	45	165
5	1-11-11	30 gal " "	5.40	162.00	30	195
6	1-12-11	30 gal " "	5.40	162.00	30	225
7	1-21-11	75 gal " "	5.40	405.00	75	300
8	2-26-11	27 gal " "	5.40	145.80	27	327
9	3-6-11	28.2 gal " "	5.40	152.28	28.2	355.2
10	3-26-11	21 gal " "	5.40	113.40	21	376.2
11	4-6-11	30 gal " "	5.40	162.00	30	406.2
12	4-9-11	30 gal " "	5.40	162.00	30	436.2
13	10-8-11	30 gal " "	5.40	162.00	30	466.2
14	11-16-11	30 gal " "	5.40	162.00	30	496.2
15	11-23-11	30 gal " "	5.40	162.00	30	526.2
16	11-29-11	30 gal " "	5.40	162.00	30	556.2
17	12-5-11	15 gal " "	5.40	81.00	15	571.2
18	12-27-11	30 gal " "	5.40	162.00	30	601.2
19	1-3-12	10.6 gal " "	5.40	57.24	10.6	611.8
20	1-8-12	15 gal " "	5.40	81.00	15	626.8
21	1-10-12	29 gal " "	5.40	156.60	29	655.8
22	1-15-12	14.7 gal " "	5.40	79.38	14.7	670.5
23	1-16-12	27 gal " "	5.40	145.80	27	697.5
24	1-18-12	15 gal " "	5.40	81.00	15	712.5
25	1-26-12	41.2 gal " "	5.40	222.48	41.2	753.7
26	1-30-12	9 gal " "	5.40	48.60	9	762.7
27	2-2-12	15 gal " "	5.40	81.00	15	777.7
28	2-8-12	30 gal " "	5.40	162.00	30	807.7
29	2-23-12	30 gal " "	5.40	162.00	30	837.7
30	3-9-12	30 gal " "	5.40	162.00	30	867.7
31	4-12-12	5 gal " "	5.40	27.00	5	872.7
32	5-2-12	10 gal " "	5.40	54.00	10	882.7
33	7-25-12	15 gal " "	7.81	117.15	15	897.7
34	10-16-12	15 gal " "	7.81	117.15	15	912.7
35	10-22-12	15 gal " "	7.81	117.15	15	927.7
36	10-29-12	15 gal " "	7.81	117.15	15	942.7
37						
38						
39						
40						

ATMAUTLUAK POWER PLANT/HEAT RECOVERY UPGRADE PROJECT
LOCALLY AVAILABLE EQUIPMENT LIST

OWNER	MAKE	MODEL	YEAR	CAPACITY (YDS, TONS)	ATTACHMENTS - (BACK-HOE, FORKS, AUGER, ETC..)	CONDITION, COMMENTS
DUMP TRUCKS						
DOZERS						
LOADERS						
Atmautluak Trad. Council	Case	621B		10,000 lbs +	Forklift + Bucket	tires need inspection tires need Chains need to change filters
TRACK HOES (EXCAVATORS)						
ATC IGAP	Bobcat	T190	2006	7,200 lbs	Back-Hoe, Forklift Bucket + Drill	Good
SKID-STEERS (BOBCATS)						
CRANES						

Moses Pauilla, JR
Compliance offical
(Grants, etc)

Atmautluak Tribal Utilities
Ref: ATC Community Hall KW / MO

	2009	2010	2011
Jan	2040	1767	1645
Feb	1670	1203	1606
Mar	1610	1597	1236
Apr	920	1108	1138
May	770	641	
Jun	660	730	
July	690	867	
Aug	720	941	
Sept	775	1018	
Oct	836	1132	
Nov	1381	1300	
Dec	1427	1864	
TOTAL	13,499	14,168	5,625

.6986 elec
.3137 PCE

$ .3849 /KWH

4280 KWH x .3849/KWH = $1635
3412/Btu

14,494,176 Btu
(134000)(.9) = 120 Gallon
Tuyo
87
840

Alaska Energy and Engineering, Inc.
Mailing Address - P.O. Box 111405
Anchorage, AK 99511-1405
(907) 349-0100,
(907) 349-8001 Fax

October 26, 2012

Lillian Pavilla
Atmautluak Limited
P.O. Box 6548
Atmautluak, AK 99559

Sent via fax to: 907 553-5420
(3 pages total)

Re: **Atmautluak Power Plant and Heat Recovery Concept Design Report**

Ms. Pavilla:

Alaska Energy and Engineering, Inc. (under authorization of the AEA/Rural Energy Programs), is working on a concept design report (CDR) for the community of Atmautluak. The CDR will evaluate a variety of potential energy projects for your community, including diesel power generation, heat recovery, wind power generation and electric distribution system.

The scope of the report will include upgraded power plant with heat recovery capability to nearby community buildings, electric distribution maintenance, and potential power generation from Wind. If funded for construction, the AEA/REG has a history of administering similar projects on a "modified" force-account basis. Force-account construction involves the owner/grantee, in this case likely the Native Village of Atmautluak, acting as the employer and utilizing local labor to the maximum extent practical.

To complete this report, we request the following items:

1. The most recent 24 months (2011 & 2012) fuel use records for the washeteria, community hall, Store, bingo hall/post office and Police Station.

2. List any planned projects that may affect fuel consumption such as additional housing, water and sewer expansion, school expansion, new community facilities, etc.

3. Status of local labor pool (please fill out attached list).

4. A list of locally available heavy equipment and information regarding condition (please fill out attached list).

We look forward to working with you and the community of Atmautluak on this project. If you have any questions please call (907) 349-0100, or fax to (907) 349-8001.

Sincerely,

Alaska Energy and Engineering, Inc.

Bill Price
Project Engineer

cc: James Nicholai, President, Village of Atmautluak, fax (907) 553.5612
Karl Reiche, Project Manager, AEA/Rural Energy Group
Steve Stassel, Alaska Energy and Engineering

Transmission Report

Date/Time	10-26-2012	12:40:10 p.m.	Transmit Header Text	
Local ID 1	907 349 8001		Local Name 1	ALASKA ENERGY & ENGINEERING
Local ID 2			Local Name 2	

This document : Confirmed
(reduced sample and details below)
Document size : 8.5"x11"

Alaska Energy and Engineering, Inc.
Mailing Address - P.O. Box 111405
Anchorage, AK 99511-1405
(907) 349-0100,
(907) 349-8001 Fax

October 26, 2012

Lillian Pavilla
Atmautluak Limited
P.O. Box 6548
Atmautluak, AK 99559

Sent via fax to: 907 553-5420
(3 pages total)

Re: **Atmautluak Power Plant and Heat Recovery Concept Design Report**

Ms. Pavilla:

Alaska Energy and Engineering, Inc. (under authorization of the AEA/Rural Energy Programs), is working on a concept design report (CDR) for the community of Atmautluak. The CDR will evaluate a variety of potential energy projects for your community, including diesel power generation, heat recovery, wind power generation and electric distribution system.

The scope of the report will include upgraded power plant with heat recovery capability to nearby community buildings, electric distribution maintenance, and potential power generation from Wind. If funded for construction, the AEA/REG has a history of administering similar projects on a "modified" force-account basis. Force-account construction involves the owner/grantee, in this case likely the Native Village of Atmautluak, acting as the employer and utilizing local labor to the maximum extent practical.

To complete this report, we request the following items:

1. The most recent 24 months (2011 & 2012) fuel use records for the washeteria, community hall, Store, bingo hall/post office and Police Station.
2. List any planned projects that may affect fuel consumption such as additional housing, water and sewer expansion, school expansion, new community facilities, etc.
3. Status of local labor pool (please fill out attached list).
4. A list of locally available heavy equipment and information regarding condition (please fill out attached list).

We look forward to working with you and the community of Atmautluak on this project. If you have any questions please call (907) 349-0100, or fax to (907) 349-8001.

Sincerely,

Alaska Energy and Engineering, Inc.

Bill Price
Project Engineer

cc: James Nicholai, President, Village of Atmautluak, fax (907) 553.5612
Karl Reiche, Project Manager, AEA/Rural Energy Group
Steve Stassel, Alaska Energy and Engineering

Total Pages Scanned : 3 Total Pages Confirmed : 3

No.	Job	Remote Station	Start Time	Duration	Pages	Line	Mode	Job Type	Results
001	068	9075535612	12:38:27 p.m. 10-26-2012	00:00:45	3/3	1	EC	HS	CP19200

Abbreviations:

HS: Host send	PL: Polled local	MP: Mailbox print	TU: Terminated by user	
HR: Host receive	PR: Polled remote	CP: Completed	TS: Terminated by system	G3: Group 3
WS: Waiting send	MS: Mailbox save	FA: Fail	RP: Report	EC: Error Correct

Transmission Report

Date/Time	10-25-2012	03:56:06 p.m.	Transmit Header Text	
Local ID 1	907 349 8001		Local Name 1	ALASKA ENERGY & ENGINEERING
Local ID 2			Local Name 2	

This document : Confirmed
(reduced sample and details below)
Document size : 8.5"x11"

Alaska Energy and Engineering, Inc.
Mailing Address - P.O. Box 111405
Anchorage, AK 99511-1405
(907) 349-0100,
(907) 349-8001 Fax

October 26, 2012

Lillian Pavilla
Atmautluak Limited
P.O. Box 6548
Atmautluak, AK 99559

Sent via fax to: 907 553-5420
(3 pages total)

Re: **Atmautluak Power Plant and Heat Recovery Concept Design Report**

Ms. Pavilla:

Alaska Energy and Engineering, Inc. (under authorization of the AEA/Rural Energy Programs), is working on a concept design report (CDR) for the community of Atmautluak. The CDR will evaluate a variety of potential energy projects for your community, including diesel power generation, heat recovery, wind power generation and electric distribution system.

The scope of the report will include upgraded power plant with heat recovery capability to nearby community buildings, electric distribution maintenance, and potential power generation from Wind. If funded for construction, the AEA/REG has a history of administering similar projects on a "modified" force-account basis. Force-account construction involves the owner/grantee, in this case likely the Native Village of Atmautluak, acting as the employer and utilizing local labor to the maximum extent practical.

To complete this report, we request the following items:

1. The most recent 24 months (2011 & 2012) fuel use records for the washeteria, community hall, Store, bingo hall/post office and Police Station.
2. List any planned projects that may affect fuel consumption such as additional housing, water and sewer expansion, school expansion, new community facilities, etc.
3. Status of local labor pool (please fill out attached list).
4. A list of locally available heavy equipment and information regarding condition (please fill out attached list).

We look forward to working with you and the community of Atmautluak on this project. If you have any questions please call (907) 349-0100, or fax to (907) 349-8001.

Sincerely,

Alaska Energy and Engineering, Inc.

Bill Price
Project Engineer

cc: James Nicholai, President, Village of Atmautluak, fax (907) 553.5612
Karl Reiche, Project Manager, AEA/Rural Energy Group
Steve Stassel, Alaska Energy and Engineering

Total Pages Scanned : 3 Total Pages Confirmed : 3

No.	Job	Remote Station	Start Time	Duration	Pages	Line	Mode	Job Type	Results
01	064	9075535612	03:48:20 p.m. 10-25-2012	00:01:26	3/3	1	EC	HS	CP14400

Abbreviations:

HS: Host send	PL: Polled local	MP: Mailbox print	TU: Terminated by user	
HR: Host receive	PR: Polled remote	CP: Completed	TS: Terminated by system	G3: Group 3
WS: Waiting send	MS: Mailbox save	FA: Fail	RP: Report	EC: Error Correct

Transmission Report

Date/Time	10-25-2012	03:49:36 p.m.	Transmit Header Text	
Local ID 1	907 349 8001		Local Name 1	ALASKA ENERGY & ENGINEERING
Local ID 2			Local Name 2	

This document : Confirmed
(reduced sample and details below)
Document size : 8.5"x11"

Alaska Energy and Engineering, Inc.
Mailing Address - P.O. Box 111405
Anchorage, AK 99511-1405
(907) 349-0100,
(907) 349-8001 Fax

October 26, 2012

Lillian Pavilla
Atmautluak Limited
P.O. Box 6548
Atmautluak, AK 99559

Sent via fax to: 907 553-5420
(3 pages total)

Re: **Atmautluak Power Plant and Heat Recovery Concept Design Report**

Ms. Pavilla:

Alaska Energy and Engineering, Inc. (under authorization of the AEA/Rural Energy Programs), is working on a concept design report (CDR) for the community of Atmautluak. The CDR will evaluate a variety of potential energy projects for your community, including diesel power generation, heat recovery, wind power generation and electric distribution system.

The scope of the report will include upgraded power plant with heat recovery capability to nearby community buildings, electric distribution maintenance, and potential power generation from Wind. If funded for construction, the AEA/REG has a history of administering similar projects on a "modified" force-account basis. Force-account construction involves the owner/grantee, in this case likely the Native Village of Atmautluak, acting as the employer and utilizing local labor to the maximum extent practical.

To complete this report, we request the following items:

1. The most recent 24 months (2011 & 2012) fuel use records for the washeteria, community hall, Store, bingo hall/post office and Police Station.
2. List any planned projects that may affect fuel consumption such as additional housing, water and sewer expansion, school expansion, new community facilities, etc.
3. Status of local labor pool (please fill out attached list).
4. A list of locally available heavy equipment and information regarding condition (please fill out attached list).

We look forward to working with you and the community of Atmautluak on this project. If you have any questions please call (907) 349-0100, or fax to (907) 349-8001.

Sincerely,

Alaska Energy and Engineering, Inc.

Bill Price
Project Engineer

cc: James Nicholai, President, Village of Atmautluak, fax (907) 553.5612
Karl Reiche, Project Manager, AEA/Rural Energy Group
Steve Stassel, Alaska Energy and Engineering

Total Pages Scanned : 3 Total Pages Confirmed : 3

No.	Job	Remote Station	Start Time	Duration	Pages	Line	Mode	Job Type	Results
001	063	9075535420	03:47:50 p.m. 10-25-2012	00:01:07	3/3	1	EC	HS	CP14400

Abbreviations:

HS: Host send	PL: Polled local	MP: Mailbox print	TU: Terminated by user	
HR: Host receive	PR: Polled remote	CP: Completed	TS: Terminated by system	G3: Group 3
WS: Waiting send	MS: Mailbox save	FA: Fail	RP: Report	EC: Error Correct

Gray Stassel Engineering, Inc.

P.O. Box 111405
Anchorage, Alaska 99511-1405
Ph. (907) 349-0100, Fax (907) 349-8001

May 21, 2013
Lillian Pavilla
Atmautluak Limited
P.O. Box 6548
Atmautluak, AK 99559

Sent via fax to: 907 553-5420
(2 pages total)

Re: Atmautluak Power Plant and Heat Recovery Concept Design Report

Ms. Pavilla:

Gray Stassel Engineering, Inc. (under authorization of the AEA/Rural Energy Programs), is working on a concept design report (CDR) for the community of Atmautluak. The CDR will evaluate a variety of potential energy projects for your community, including diesel power generation, heat recovery, wind power generation and electric distribution system.

The scope of the report will include upgraded power plant with heat recovery capability to nearby community buildings, electric distribution maintenance, and potential power generation from Wind. If funded for construction, the AEA/REG has a history of administering similar projects on a "modified" force-account basis. Force-account construction involves the owner/grantee, in this case likely the Native Village of Atmautluak, acting as the employer and utilizing local labor to the maximum extent practical.

To complete this report, we request the following items:

1. List any newly planned projects that may affect fuel consumption such as additional housing, water and sewer expansion, school expansion, new community facilities, etc.

2. Status of local labor pool (please fill out attached list).

We look forward to working with you and the community of Atmautluak on this project. If you have any questions please call (907) 349-0100, or fax to (907) 349-8001.

Sincerely,

Bill Price
Project Engineer
Gray Stassel Engineering

cc: James Nicholai, President, Village of Atmautluak, fax (907) 553.5612
Karl Reiche, Project Manager, AEA/Rural Energy Group
Steve Stassel, Gray Stassel Engineering

Transmission Report

Date/Time	05-21-2013	02:18:13 p.m.	Transmit Header Text	GRAY STASSEL ENGINEERING
Local ID 1	907 349 8001		Local Name 1	GRAY STASSEL ENGINEERING
al ID 2			Local Name 2	

This document : Confirmed
(reduced sample and details below)
Document size : 8.5"x11"

Gray Stassel Engineering, Inc.

P.O. Box 111405
Anchorage, Alaska 99511-1405
Ph. (907) 349-0100, Fax (907) 349-8001

May 21, 2013
Lillian Pavilla
Atmautluak Limited
P.O. Box 6548
Atmautluak, AK 99559

Sent via fax to: 907 553-5420
(2 pages total)

Re: Atmautluak Power Plant and Heat Recovery Concept Design Report

Ms. Pavilla:

Gray Stassel Engineering, Inc. (under authorization of the AEA/Rural Energy Programs), is working on a concept design report (CDR) for the community of Atmautluak. The CDR will evaluate a variety of potential energy projects for your community, including diesel power generation, heat recovery, wind power generation and electric distribution system.

The scope of the report will include upgraded power plant with heat recovery capability to nearby community buildings, electric distribution maintenance, and potential power generation from Wind. If funded for construction, the AEA/REG has a history of administering similar projects on a "modified" force-account basis. Force-account construction involves the owner/grantee, in this case likely the Native Village of Atmautluak, acting as the employer and utilizing local labor to the maximum extent practical.

To complete this report, we request the following items:

1. List any newly planned projects that may affect fuel consumption such as additional housing, water and sewer expansion, school expansion, new community facilities, etc.

2. Status of local labor pool (please fill out attached list).

We look forward to working with you and the community of Atmautluak on this project. If you have any questions please call (907) 349-0100, or fax to (907) 349-8001.

Sincerely,

Bill Price
Project Engineer
Gray Stassel Engineering

cc: James Nicholai, President, Village of Atmautluak, fax (907) 553.5612
Karl Reiche, Project Manager, AEA/Rural Energy Group
Steve Stassel, Gray Stassel Engineering

Total Pages Scanned : 2 Total Pages Confirmed : 2

No.	Job	Remote Station	Start Time	Duration	Pages	Line	Mode	Job Type	Results
1	403	9075535420	02:16:41 p.m. 05-21-2013	00:00:56	2/2	1	EC	HS	CP14400

Abbreviations:

HS: Host send	PL: Polled local	MP: Mailbox print	TU: Terminated by user	
HR: Host receive	PR: Polled remote	CP: Completed	TS: Terminated by system	G3: Group 3
WS: Waiting send	MS: Mailbox save	FA: Fail	RP: Report	EC: Error Correct

Transmission Report

Date/Time	05-21-2013	02:19:58 p.m.	Transmit Header Text	GRAY STASSEL ENGINEERING
Local ID 1	907 349 8001		Local Name 1	GRAY STASSEL ENGINEERING
al ID 2			Local Name 2	

This document : Confirmed
(reduced sample and details below)
Document size : 8.5"x11"

Gray Stassel Engineering, Inc.

P.O. Box 111405
Anchorage, Alaska 99511-1405
Ph. (907) 349-0100, Fax (907) 349-8001

May 21, 2013
Lillian Pavilla
Atmautluak Limited
P.O. Box 6548
Atmautluak, AK 99559

Sent via fax to: 907 553-5420
(2 pages total)

Re: Atmautluak Power Plant and Heat Recovery Concept Design Report

Ms. Pavilla:

Gray Stassel Engineering, Inc. (under authorization of the AEA/Rural Energy Programs), is working on a concept design report (CDR) for the community of Atmautluak. The CDR will evaluate a variety of potential energy projects for your community, including diesel power generation, heat recovery, wind power generation and electric distribution system.

The scope of the report will include upgraded power plant with heat recovery capability to nearby community buildings, electric distribution maintenance, and potential power generation from Wind. If funded for construction, the AEA/REG has a history of administering similar projects on a "modified" force-account basis. Force-account construction involves the owner/grantee, in this case likely the Native Village of Atmautluak, acting as the employer and utilizing local labor to the maximum extent practical.

To complete this report, we request the following items:

1. List any newly planned projects that may affect fuel consumption such as additional housing, water and sewer expansion, school expansion, new community facilities, etc.

2. Status of local labor pool (please fill out attached list).

We look forward to working with you and the community of Atmautluak on this project. If you have any questions please call (907) 349-0100, or fax to (907) 349-8001.

Sincerely,

Bill Price
Project Engineer
Gray Stassel Engineering

cc: James Nicholai, President, Village of Atmautluak, fax (907) 553.5612
Karl Reiche, Project Manager, AEA/Rural Energy Group
Steve Stassel, Gray Stassel Engineering

Total Pages Scanned : 2 Total Pages Confirmed : 2

No.	Job	Remote Station	Start Time	Duration	Pages	Line	Mode	Job Type	Results
1	404	9075535612	02:17:03 p.m. 05-21-2013	00:00:52	2/2	1	EC	HS	CP12000

Abbreviations:

HS: Host send	PL: Polled local	MP: Mailbox print	TU: Terminated by user	
HR: Host receive	PR: Polled remote	CP: Completed	TS: Terminated by system	G3: Group 3
WS: Waiting send	MS: Mailbox save	FA: Fail	RP: Report	EC: Error Correct

Atmautluak Traditional Council

P.O. Box 6568
Atmautluak, Alaska 99559
Ph (907) 553-5610 Fax 553-5612
atmautluaktc@hughes.net

FAX

To; Mr. Bill Price **From;** Willie Frye

Fax; (907) 349-8001 **Pages;** 3 plus cover

Phone; (907) 386-1503 **Date;** 6-12-13

Re; Local labor pool **cc;**

__Urgent __For Review __Please Comment __Please Reply __Please Recycle

***Comments**

This may contain information which is privileged and confidential. It is intended for the use of the individual or facility to which it is addressed. If this has been transmitted to you in error, please notify us as soon as possible by telephone and destroy the document(s) properly. Any dissemination, distribution or copying of this communication is prohibited.

ATMAUTLUAK POWER PLANT/HEAT RECOVERY UPGRADE PROJECT
LOCAL LABOR POOL

* LOOK *
* Aten!! *

Name	Laborer	Truck Driver	Heavy Equip Operator	Heavy Equip Mechanic	Welders Helper	Certified Welder (1)	Apprentice Electrician	Journeyman Electrician (2)
Joseph Pavilla	X				X			
Christopher Nicholai	X	X	X					
Jonathan Mojin	X			X	X			
David Sims	X	X	X		X			
Joshua Y Nick Jr.	X	X	X					
Paul Wassa	X	X	X		X			
Wilson Nicholai	X	X	X					
Billy Gilman JR	X	X						
Nick Pavilla JR	X							
Willie S. Nicholai	X							
Carl Gamechuk	X							
Wassillie Frye	X							
Rex Active	X							

* SIGN UP IF Interested *

1) With Current API Welding Certificate
2) With Current Certificate of Fitness

10/22/2012

M

ATMAUTLUAK POWER PLANT/HEAT RECOVERY UPGRADE PROJECT
LOCAL LABOR POOL

Name	Laborer	Truck Driver	Heavy Equip Operator	Heavy Equip Mechanic	Welders Helper	Certified Welder (1)	Apprentice Electrician	Journeyman Electrician (2)
Lyle LaFrambaise	X	X	X				X	
Lonie Nicholai	X	X						
NICK GILMAN	✓							
[illegible]			X					
Owen Nicholai	X		X	X	X			
Wilson E Andrew Sr	X		X		X	X		
Daniel Charles	X	X	X				X	
Daniel A. Waska	X							
Henry Tikiun, Jr.	X							
Steven Alexie Sr.	X			X	X			
Peter Jenkins		X	X					

1) With Current API Welding Certificate
2) With Current Certificate of Fitness

10/22/2012

Atmautluak Generator System Report
FY 09-FY 13

FY 09			
Month	# of Days	KWH Average	Total KWH
September	19	31.54	599.26
October	13	35	455
November	16	39.88	638.08
December	17	35.86	609.62
January	8	31.9	255.2
February	14	37.31	522.34
April	17	35.55	604.35
May	13	33.64	437.32

FY 10			
Month	# of Days	KWH Average	Total KWH
August	11	28.23	310.53
September	19	32.59	619.21
October	10	46.18	461.8
November	12	35.33	423.96
January	10	36.79	367.9
April	5	38.88	194.4

FY 11			
Month	# of Days	KWH Average	Total KWH
August	6	32.85	197.1
September	14	32.01	448.14
October	18	37.8	680.4
November	11	31.27	343.97
December	11	36.81	404.91
January	1	32	32

FY 12			
Month	# of Days	KWH Average	Total KWH
April	20	39.99	799.8
May	22	39.58	870.7
June	23	25.78	592.94

FY 13			
Month	# of Days	KWH Average	Total KWH
November	9	44.86	403.7
December	11	44.13	485.4
March	13	43.33	588.3
April	14	47.04	658.6

Reported

MID Aug School START

MID JULY

2nd JULY City Bike

JAN 13 19518

2

ELECTRICIAN

JULY 8 ED CHASE

907 545 0957 C

907 543 4895 O

Meter	**090-ATE-06**		**ATMAUTLUAK SCHOOL**		
Building	**18**		**AT-06 ATMAUTLUAK GENERATOR BUILDING**		
Cost Center	**69**		**Master Meter**		
			X 120		
Month FY13	**Current**	**Previous**	**KWH**	**Cost**	**Unit Cost**
July	16,895	16,828	8,040	$3,055.20	$0.380
August	17,086	16,895	22,920	$8,709.60	$0.380
September	17,286	17,086	24,000	$9,120.00	$0.380
October	17,550	17,286	31,680	$12,038.40	$0.380
November	17,716	17,550	19,920	$7,569.60	$0.380
December	17,753	17,716	4,440	$1,687.20	$0.380
January	17,881	17,753	15,360	$5,836.80	$0.380
February	17,906	17,881	3,000	$1,140.00	$0.380
March	17,906	17,906	0	$-00	$0.380
April	17,943	17,906	4,440	$1,687.20	$0.380
May	18,160	17,943	26,040	$9,895.20	$0.380
June		18,160			
Totals			159,840	$60,739.20	0.380

Meter	090-ATE-06	ATMAUTLUAK SCHOOL
Building	18	AT-06 ATMAUTLUAK GENERATOR BUILDING
Cost Center	69	Master Meter

Month FY12	Current	Previous	KWH	Cost	Unit Cost
July	15,975	15,858	14,040	$5,335.20	$0.380
August	16,073	15,975	11,760	$4,468.80	$0.380
September	16,266	16,073	23,160	$8,800.80	$0.380
October	16,489	16,266	26,760	$10,168.80	$0.380
November	16,506	16,489	2,040	$775.20	$0.380
December	16,657	16,506	18,120	$6,885.60	$0.380
January	16,691	16,657	4,080	$1,550.40	$0.380
February	16,691	16,691	0	$-00	#DIV/0!
March	16,804	16,691	13,560	$5,152.80	$0.380
April	16,828	16,804	2,880	$1,094.80	$0.380
May	16,828	16,828	0	$-00	#DIV/0!
June	16,828	16,828	0	$-00	#DIV/0!
Totals			116,400	$44,232.40	0.380

Atmautluak Tribal Utilities

Light Bill

Date: October 2, 2012
Light Bill: August, 2012
Customer ID: LKSD/ATT High School

Bill to: LKSD
Lower Kuskokwim School District
P.O. Box 305
Bethel, AK 99559

Rate per KWH:
0.3800
KWH Multiplier: 120
PCE Rate for Eligible Class
PCE Rate: None

Date	Current	Previous	Total Kwh	PCE Credit	Energy Charge	Payment	Balance
1/12/12	16657	16506	18120		6885.60		$6,885.60
1/24/12	Payment Receipt# 4813					6,885.60	$0.00
2/2/12	16691	16657	4080		1550.40		1,550.40
2/21/12	Payment Receipt# 5070					1,550.40	-
9/4/12	Payment Receipt# 6645					9,302.40	-
10/2/12	Payment Receipt# 6900					8,709.60	-
						Total Balance Due	$0.00

Remittance	
Statement #	August 2012 Billing
Date	10/2/2012
Amount Due	$0.00
Amount Enclosed	

P.O. Box 6564 Atmautluak, Alaska 99559 Phone/Fax (907)553-5429 email:atmautluakutilities@hughes.net

APPENDIX G

GEOTECHNICAL LETTER REPORT

November 30, 2012 123-95944

Mr. Steve Stassel, PE
Alaska Energy & Engineering
1301 East Klatt Road
Anchorage, AK 99515

RE: GEOTECHNICAL INVESTIGATION AND FOUNDATION RECOMMENDATIONS FOR THE REPLACEMENT POWER PLANT, ATMAUTLUAK, ALASKA

Dear Steve:

This report presents the results of the site investigation and geotechnical engineering recommendations conducted by Golder Associates Inc. (Golder) for the proposed replacement power plant in Atmautluak, Alaska. Golder's scope of work included a review of existing geotechnical data for the Atmautluak area, a site assessment, and a letter report summarizing our findings and geotechnical recommendations for the replacement power plant foundation. Our services were completed in general accordance with our e-mail proposal to you dated October 31, 2012. During the course of our work, we have consulted with you, and Ms. Lillian Pavilla, the manager of Atmautluak Limited.

1.0 PROJECT INFORMATION

We understand that the replacement power plant will likely be located to the west of the existing power plant and south of the existing tank farm. The replacement power plant will be a modular 48- by 16-foot building placed on 4 to 6 foundation piles. We understand that the total building dead load will be approximately 80,000 pounds (80 kips) with slight cyclic vibratory loads due to the diesel power generators. We understand that the desired foundation is a driven adfreeze pipe or H-pile. A fill pad is not currently planned at the site.

2.0 FOUNDATION INVESTIGATION

On November 7, 2012 Mr. Jeffrey Levison of Golder arrived on site in Atmautluak, AK. Upon arriving Mr. Levison advanced probes throughout the project area and inserted thermistors into existing conduit adjacent to nearby foundation piles to measure ground temperatures.

Probes were advanced by drilling through the surficial frost and manually advancing a probe to refusal. A DeWalt cordless drill and a 12-inch long 3/4-inch diameter drill bit were used to drill through the frost at ground surface. Frost was generally 12 to 14 inches in thickness. Following drilling, a ½-inch diameter steel rod with a T-handle was inserted into the drilled hole and pushed into the ground surface until refusal.

Probe refusal is inferred to represent the top of the permafrost and depending on the depth, may indicate the depth of seasonal thaw. However, deeper refusal depths may indicate a degrading permafrost conditions. It is also possible that probe refusal was on a dense soil layer or other hard substrate that does not represent the subsurface permafrost conditions.

Ground temperatures were collected using thermistors placed in the existing conduit installed during construction of the tank farm and the school's generator building foundation. The thermistors were inserted into the conduit and allowed to acclimatize to the ground temperatures for at least 1 hour prior to recording in-situ ground temperatures.

Golder Associates Inc.
2121 Abbott Road, Suite 100
Anchorage, AK 99507 USA
Tel: (907) 344-6001 Fax: (907) 344-6011 www.golder.com

Golder Associates: Operations in Africa, Asia, Australasia, Europe, North America and South America

Golder, Golder Associates and the GA globe design are trademarks of Golder Associates Corporation

DRAFT

3.0 REVIEW OF EXISTING GEOTECHNICAL INFORMATION

Golder and Duane Miller Associates, LLC (DMA, now Golder) have conducted geotechnical investigations in Atmautluak, as summarized below. We also reviewed third party geotechnical reports available in our files. Please note that third party geotechnical data are presented for informational purposes only, since Golder is not able to verify the quality of any third party geotechnical data.

- **Wind Towers Geotechnical Services, Golder, 2012 –** Golder advanced three boreholes at the proposed wind tower sites. Two were advanced at the preferred location north of the village and west of the existing sewage lagoon. Another was advanced to the south of the village at an alternative location. The boreholes were advanced 40 to 50 feet below ground surface (bgs). Subsurface soil conditions consisted of surficial organic soils, peat (PT) and organic silt (OL), from 3.5 to 5.5 feet. Mineral silt underlies the organics to depths of 12 to 30 feet bgs. Sand was observed below the mineral silt to the depth explored in the boreholes. The soils were frozen throughout the profile with ground temperatures below the depth of thermal variation between 29.7 and 30.3 degrees Fahrenheit (°F).
- **Washeteria Foundation Assessment Geotechnical Services, Golder, 2012 –** Golder conducted a foundation assessment of the adfreeze pile foundation of the existing Washeteria. A pile cap survey was completed to determine the relative movements of the foundation piles. Probes were also advanced in the vicinity of the Washeteria and along the gravity section of the sewer line from the Washeteria to the lift station. Probes along the sewer line ranged from 2.5 to 6.5 feet bgs and were generally deeper in areas where ponded water was observed at the ground surface.
- **Wastewater Improvement Geotechnical Services, DMA, 2007 –** DMA drilled two test borings west of the existing school with a Texoma drill rig using a 14-inch diameter bit. The borings encountered silt (ML) and organic silt (OL). Silty sand (SM) was reported at 30 feet bgs in one boring near the exploration depth. Based on drilling action, a 6- to 8-inch marginally frozen soil layer was inferred at 23.5 feet bgs in one of the boreholes. Ground temperatures indicate frozen soil conditions from about 8 feet bgs to the depth explored, with ground temperatures around 31.5 °F below 20 feet.
- **Water Storage and Washeteria Geotechnical Services, Golder, 2005 –** Golder explored the area of the proposed new Washeteria and a 100,000 gallon water storage tank. The site is located approximately 600 feet west of the existing Washeteria, past the lift station. The test borings encountered silt (ML) with some silty fine sand (SM) and were generally frozen to the boring termination depth with layers of massive ice noted in the silts at varying depths and thicknesses. In one boring, 1.5 feet of unfrozen material was observed at 5 feet bgs. Ground temperatures were 29.5 to 30.5 °F below a depth of 8 feet.
- **Bulk Fuel System Geotechnical Services, DMA, 1996 –** DMA investigated soil conditions as part of a foundation study for the proposed fuel system upgrade. Two test borings were drilled approximately 400 feet northwest of the Washeteria. One of the borings encountered a 4.5-foot thick layer of organic silt (OL) overlying a silt (ML) with thin layers of peat (PT) and organic silt (OL) at 7.5 and 9 feet, respectively. Ice layers were encountered at 3 to 17 feet and the borings graded sandier near termination depth. Both borings were frozen to a depth of 30 feet, the depth explored. Stable ground temperatures were observed between 30 and 31 °F below 14 feet bgs.
- **Wastewater System Geotechnical Services, Shannon & Wilson Inc., 1993 –** Shannon and Wilson Inc. investigated area soil conditions as part of a study for the proposed lift station, honey bucket lagoon, sewage lagoon and pipeline. They advanced 12 borings throughout the village, but a site boring location plan was not provided with the report. The boring logs showed an organic surface overlying silt (ML) with areas of massive ice and peat (PT) throughout the investigation depths. In general, the silt (ML)

DRAFT

was underlain by a fine-grained sand (SP/SP-SM/SM) layer which started between 9 to 30 feet bgs. In most cases, the sand later did not begin until 25 feet bgs and deeper. All borings were frozen with lower visible ice contents observed in the sandier soils.

Based on our review of historical geotechnical data, the subsurface conditions within the Atmautluak area appear to be generally consistent with a surficial organic mat of peat (PT) and organic silt (OL) to approximately 4 to 5 feet bgs. Underlying the surficial organics, frozen mineral silt (ML) or silty sand (SM) was observed to depths of 30 to 35 feet bgs. The soils below the expected depth of seasonal thaw were generally considered to be ice-rich permafrost to the depths explored. Unfrozen soil sections observed during previous drilling efforts were near the ground surface and are likely areas of seasonal thaw.

4.0 CLIMATE DATA

Winter air temperatures are warming throughout most of Alaska including the Bethel region. Historical and current design data including average thawing and freezing indices are presented in Table 1 for the Atmautluak area. The indices are calculated from data available by the University of Alaska Fairbanks (UAF) Scenarios Network for Alaska and Arctic Planning (SNAP). Design indices are based on the three coldest winters (freezing indices) or warmest summers (thawing indices) observed during the analysis period.

Table 1: Engineering Climate Indices for Atmautluak, AK

Design Index	1948-1978	1980-2009	2012-2042 (Estimated)[1]
Average Air Temperature[2]	28.5°F	30.5°F	32.8°F
Average Freezing Index	3790°F-day	3250°F-day	2615°F-day
Average Thawing Index	2500°F-day	2750°F-day	2910°F-day
Design Freezing Index	4680°F-day	4350°F-day	3780°F-day
Design Thawing Index	2810°F-day	3550°F-day	3685°F-day

Notes: 1) Projected by UAF SNAP, Global Climate Model ECHAM5, Emission Scenario A1B.
2) Air temperatures after 2009 are predicted from SNAP.

SNAP data was prepared by Rupp et al. (2009) and is distributed as two separate products. Historical records were calculated using the PRISM model by combining climate data from multiple meteorological records across the state of Alaska from 1901 to 2009, and modeled across the state in a manner that accounts for "variations in the slope, aspect, elevation, and coastal proximity" (PRISM Climate Group, 2004). Forward-looking projections were prepared from 2009 to 2099 utilizing multiple global climate models and several carbon emission scenarios.

This report utilized the ECHAM5 global model results and the mid-range (A1B) carbon emission scenario. The ECHAM5 global model was found by the UAF SNAP group to have the highest accuracy for Alaska.

5.0 SITE INVESTIGATION RESULTS

Probes advanced in the area of the proposed replacement power plant ranged between 2.7 to 5 feet bgs. The average probe depth is 3.3 feet bgs. Probe depths were generally deeper near the arctic sewer pipe running to the sewage lagoon adjacent to the boardwalk. The deeper thaw depths observed may be due to snow drifts accumulating near the boardwalk. The probe location and depth is presented in Figure 1, Probe Location Map.

The ground temperatures collected at the tank farm and the school's generator building are presented in Figure 2, Measured Ground Temperatures. The ground temperatures below the depth of seasonal

DRAFT

variation, approximately 12 feet below ground surface) are 29.5°F and 31°F for the tank farm and the school's generator building, respectively.

6.0 DISCUSSION

We understand that the preferred foundation system is a driven adfreeze pile foundation. Based on our experience in the Atmautluak area, observed thaw depths in the project area, ground temperature measurements, and our engineering judgment, a driven adfreeze pile foundation system may be appropriate foundation system for the proposed replacement power plant. We understand the design service life of the replacement power plant is approximately 20 to 25 years.

The existing power plant is founded on adfreeze pipe piles and seems to be performing in a manner consistent with expected geotechnical performance. We understand the need to replace the existing power plant is due to excessive vibrations of the building when select generators are running.

The foundation piles will need to resist the structural foundation loads as well as the seasonal frost uplift forces. The frost uplift force is developed within the active layer due to the expansion of water within the soils during freezing and ice lens formation, and can be significant in the Atmautluak area. Sustained axial compression loads (assumed to be full dead plus one half live loads) may not exceed frost uplift forces for the facility. However, if the sustained loads on the foundation pile are in excess of the frost uplift force discussed within this report, we should be notified to verify that pile embedment is adequate to resist creep related foundation movements.

The permafrost along the foundation piles and underlying the building footprint must be maintained at or below the recommended design temperature throughout the project design life to support the building. Given the warm ground temperatures, approximately 31°F in some regions of the village, uncertainty of soil and permafrost conditions, and an expected climate warming trend, we recommend the installation of passive cooling adjacent to the foundation piles. Site specific soil conditions were not determined as part of our field investigation, however we expect soil and permafrost conditions to be consistent with other areas of the village. The passive cooling should consist of Thermoprobes as described in the recommendations section of this report.

Passive cooling may be installed using a number of methods, including: drilling a borehole adjacent to the driven foundation pile or creating a conduit along the side of the pile. In order to decrease the potential number and type of construction equipment required for foundation construction, we recommend creating a conduit along the side of the pile. This conduit can be created by welding angle iron to the side of a pipe pile or H-pile. Based on previous projects, an H-pile is recommended with this method. The conduit created by the angle iron will be advanced into the subsurface as the pile is driven.

Since an underlying granular pad is not planned at the site, we have assumed that construction will be completed during the winter months when the ground surface is frozen and the organic surface is protected from damage.

7.0 ENGINEERING RECOMMENDATIONS

The following discussion presents the foundation recommendations for driven adfreeze H-pile foundation piles with passive cooling supporting the proposed replacement power plant. This system was selected in order to reduce equipment required for construction and for thermal protection over the life of the structure. The pile size selected is a HP10x57, other pile sizes can be evaluated if required.

7.1 Idealized Soil Profile

The soil profile used in our analysis presented in Table 2 is based on our previous work within the Atmautluak area and our engineering judgment.

DRAFT

Table 2: Idealized Soil Profile

Layer Name	Depth of Layer	USCS Soil Type	Average Moisture Content	Average Total Unit Weight
Organic Soils	0 – 5 ft	PT, OL	150%	78 pcf
Silts	5 – 30 ft	ML	75%	92 pcf
Sands	30 – 50 ft	SP/SP-SM/SM	25%	121 pcf

Notes: 1) pcf = pounds per cubic foot
2) Moisture contents are based on percentage of dry weight.

Based on the soil profile and climate conditions discussed above, the active layer thickness in the Atmautluak area is expected to be 3.5 to 4 feet, as calculated by Army Corps of Engineers methods (TM 5-852-6). Calculations were completed using the design thawing indices for the 2012 to 2042 period presented in Table 1. The calculations above are slightly deeper than the observed active layer thickness during probing activities.

7.2 Foundation Loading

The minimum pile embedment is controlled by either the structural loading conditions, or the frost uplift force. The dead weight of the structure is approximately 80 kips. Other structural loading cases, such as live loads, were not available at the time of our submittal. If four piles are used to support the building, the axial compressive structural pile load is 20 kips per pile.

The frost uplift force acts on the perimeter of the pile through the active layer. The assumed pressure that develops within the active layer due to frost is 40 pounds per square inch (psi). The area used within our calculation is the circumscribed area (4 times the pile width) of the pile within the thickness of the active layer. The unfactored frost heave force on the HP10x57 with a 4-foot active layer is 79 kips. These loads are greater than the anticipated structural compressive loads. Thus, we have assumed seasonal frost will control the pile embedment.

7.3 Axial Capacity

The structural and frost uplift forces will be resisted by the adfreeze bond along the box area of the H-Pile below the active layer. The adfreeze bond capacity is dependent on the ground temperature and method of installation. Our design is based on a sustained ground temperature of 30.5 °F below the depth of seasonal thermal variation. The minimum recommended pile embedment depths include a factor of safety of at least one and a half (1.5), based on the unfactored frost uplift forces. Piles should be driven into the subsurface to a minimum depth of 40 feet bgs. If sustained loads greater than the frost uplift force are expected, we should be contacted to verify our recommendations.

For design purposes, we have estimated a total settlement at the pile cap in the range of 1-inch in 20 years. However, this settlement will depend on the ground temperatures and pile installation methods being consistent with the geotechnical foundation recommendations presented within this report.

7.4 Lateral Capacity

Lateral loading of the piles due to wind, seismic or vibratory loading of the structure will act on the foundation of the structure. The bending moment imposed on the piles depends on the lateral load imposed at the top of the pile and the length from the top of the pile to the point-of-fixity. For permafrost conditions, each pile can be assumed to cantilever above the point-of-fixity. For this site, the point-of-fixity during the summer months is considered to be 6 inches below the active layer depth. The nominal active layer for the site is expected to be 4 feet bgs. During the winter months, when the active layer is frozen, the point-of-fixity is approximately 0.5-foot bgs. The depth to the point-of-fixity for summer and

DRAFT

winter conditions are 4.5 and 0.5 feet, respectively. The project structural engineer should select the orientation of the H-pile due to the different structural properties along the strong and weak axis.

7.5 Passive Cooling and Ground Temperature Monitoring

Passive cooling and ground temperature monitoring should be placed in conduit adjacent to the H-piles. The conduit is created by welding angle iron to the web and flange of the H-pile creating a square void. Two conduits should be attached to each H-pile one for the Thermoprobe and another for ground temperature monitoring. The two conduits should be located on opposite corners of the web/flange connection and on either side of the H-pile. The angle iron should be large enough to create a void of sufficient size to create a space for a Thermoprobe. The conduit should be water tight and should be designed by the project structural engineer to resist anticipated forces during driving.

The annulus of the angle iron should be backfilled with grout to provide a thermal connection between the Thermoprobe or ground temperature conduit and the ground surface. The grout should consist of a water-cement mixture. Care should be taken to ensure the void space is filled to the depth of the angle iron and “bridging” does not occur during placement.

7.5.1 Passive Cooling

Passive cooling is recommended adjacent to the foundation piles in order to ensure long-term performance of the foundation. For this project, passive cooling systems should consist of a two phase liquid-vapor system (Thermoprobe) developed and manufactured by Arctic Foundations, Inc. (AFI). The amount of heat removed by the Thermoprobe each winter should be greater than the heat transferred into the ground surface during the summer months. The Thermoprobe should be 1-inch diameter and have a nominal 30 square foot (sf) condenser section, or as recommended by the manufacturer. The Thermoprobe should be embedded at least 20 feet bgs.

The condenser fins of the Thermoprobes should be exposed to ambient air temperatures and wind during the winter months for efficient cooling of the subsurface. Thus, the Thermoprobe condensers should be placed on the pile in a manner that allows the condensers to be exposed in the clear space underlying the structure or along the side of the structure.

In order to maintain the thermal state of the soils underlying the site, a minimum 3-foot clear space should be maintained between the ground surface and the base of the structural supports. We have assumed that a granular fill pad is not planned on the site. Care should be taken during construction to avoid unnecessary site disturbance. If a pad is planned, we should be notified to review and verify our recommendations.

7.5.2 Ground Temperature

A closed-end standpipe should also be installed adjacent to the foundation pile to permit ground temperature measurements. The standpipe should be oriented opposite the Thermoprobe. Closed-end 1-inch diameter schedule 40 (or equivalent) HDPE pipe should be installed to the same elevation as the bottom of the Thermoprobe. The stand pipe should extend at least 1-foot above ground surface.

7.6 Construction Considerations

Piles should be driven continuously and plumb to within 1/8-inch per foot, unless specified otherwise by the structural engineer. Piles should be within 3 inches of the design locations. Other issues to consider are discussed below.

- **Driving Shoe:** A flush driving shoe may not be available. A non-flush driving shoe is not recommended. If hard driving conditions are expected and pile reinforcement is necessary, a short 6 to 12 inch high yield strength HP10x57 section may be used to strengthen the pile at the tip.

DRAFT

- **Angle Iron Conduit:** The conduit should extend 3 feet beyond the minimum Thermoprobe embedment to ensure proper installation of the Thermoprobes.
- **Hammer/Pile System Acceptance and Driving Criteria:** The installation hammer selected should be sized to achieve the minimum embedment without pile damaging the pile. Compressive driving stresses should not exceed 90 percent of the steel yield strength. A maximum blow count for the particular pile and hammer sizes should be determined prior to starting work. We can provide further guidance and driving criteria once an installation hammer has been selected by the contractor.
- **Frozen Soil Conditions:** The contractor should be aware that frozen soils from seasonal frost and permafrost will be encountered on site. Pile driving equipment should be capable of pile installation within permafrost and provisions for pre-drilling or spudding should be included.
- **Pile Installation Inspection:** We recommend that a qualified technician or engineer be present during production driving and that complete driving logs be maintained. Complete logs should include installation blows per foot, hammer type and size, date and time of installation, hammer stroke and hammer setting. In addition we recommend we be given the opportunity to review the plans and specification, prior to bidding to verify that they are in accordance with our recommendations, and the as-built records, to validate that the piles were installed in a manner consistent with our recommendations.

For the recommendations above, we have assumed that construction will occur during the winter months when the tundra surface is fully frozen and protected from surface damage due to construction activities. It is essential that construction planning for the pile foundations include adequate time after installation to allow for freezeback of the piles. To allow freezeback of the driven adfreeze piles, at least 2 days should be allotted prior to pile structural loading. Freezeback should be defined as the ground temperatures of the piles below 31 °F throughout the length of the pile.

8.0 USE OF THIS REPORT

This report has been prepared exclusively for the use of Alaska Energy & Engineering for site planning and design of the proposed replacement power plant in Atmautluak, Alaska. If there are significant changes in the nature, design or location of the facilities, we should be notified so that we may review our conclusions and recommendations in light of the proposed changes and provide a written modification or verification of the changes.

There are possible variations in subsurface conditions between explorations and also with time. Therefore, inspection and testing by a qualified geotechnical engineer or technician should be included during construction to provide corrective recommendations adapted to the conditions revealed during the work. In addition, a contingency for unanticipated conditions should be included in the construction budget and schedule.

The work program followed the standard of care expected of professionals undertaking similar work in the State of Alaska under similar conditions. No warranty expressed or implied is made.

DRAFT

9.0 CLOSING

Please contact myself or Richard Mitchells with any questions or concerns.

GOLDER ASSOCIATES INC.

DRAFT, No Signatures

Heather M. Brooks, PE
Project Geotechnical Engineer

Richard A. Mitchells, PE
Associate and Senior Geotechnical Engineer

Attachments: Figure 1 Probe Location Map
Figure 2 Measured Ground Temperatures

HMB/RAM/mlp

DRAFT

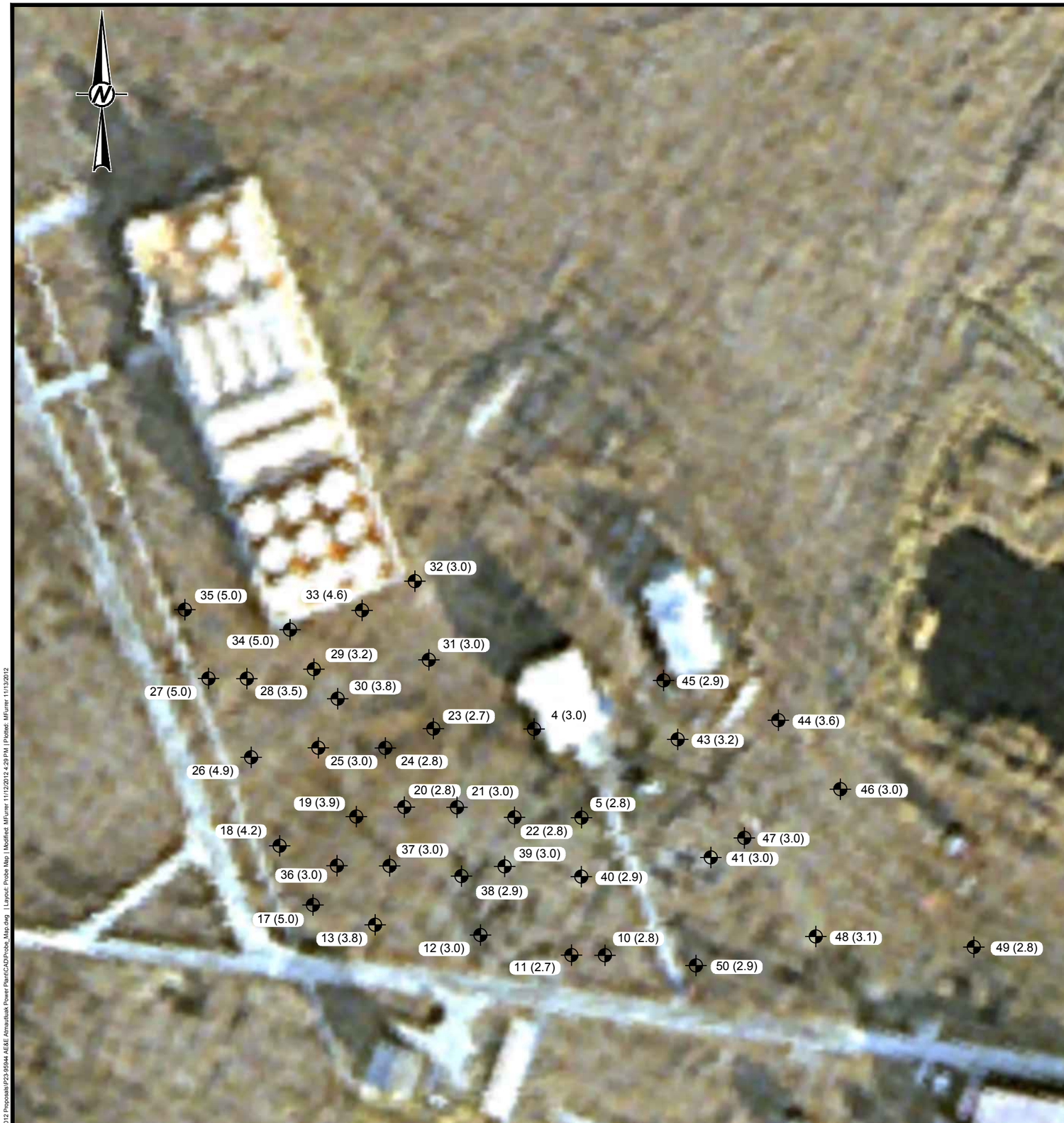

PROBE DEPTH TABLE

WAYPOINT	DEPTH TO REFUSAL (FEET BELOW SURFACE)
4	3.0
5	2.8
10	2.8
11	2.7
12	3.0
13	3.8
17	5.0
18	4.2
19	3.9
20	2.8
21	3.0
22	2.8
23	2.7
24	2.8
25	3.0
26	4.9
27	5.0
28	3.5
29	3.2
30	3.8
31	3.0
32	3.0
33	4.6
34	5.0
35	5.0
36	3.0
37	3.0
38	2.9
39	3.0
40	2.9
41	3.0
43	3.2
44	3.6
45	2.9
46	3.0
47	3.0
48	3.1
49	2.8
50	2.9

LEGEND

45 (2.9) 2012 GOLDER PROBE LOCATIONS
WAYPOINT # (DEPTH IN FEET TO REFUSAL)

NOTES

1. COORDINATES ARE ALASKA STATE PLANE AK83-7F.
2. AERIAL IMAGERY DATES ARE 09/07 TO 10/11/2007, DISTRIBUTED BY ALASKA SDMI THROUGH PUBLIC DOMAIN LICENSING, ACQUIRED FROM THE DCCED LAND MANAGEMENT COMMUNITY MAPPING PROJECT.

DRAFT

0 20 40 60
SCALE FEET

REV	DATE	REVISION DESCRIPTION	DES	CADD	CHK	RVW
2	2012-11-12		XXX	MSF	XXX	XXX

PROJECT
ALASKA ENERGY AND ENGINEERING
ATMAUTLUAK POWER PLANT
ATMAUTLUAK, ALASKA

TITLE
PROBE LOCATION MAP

Golder Associates

PROJECT No. P23-95944
FILE No. Probe_Map
SCALE 1"=40'

FIGURE 1

DRAFT

J:\2012 Proposals\P23-95944 AE&E Atmautluak Power Plant\CAD\Probe_Map.dwg | Layout: Probe Map | Modified: MFurner 11/12/2012 4:29 PM | Plotted: MFurner 11/13/2012

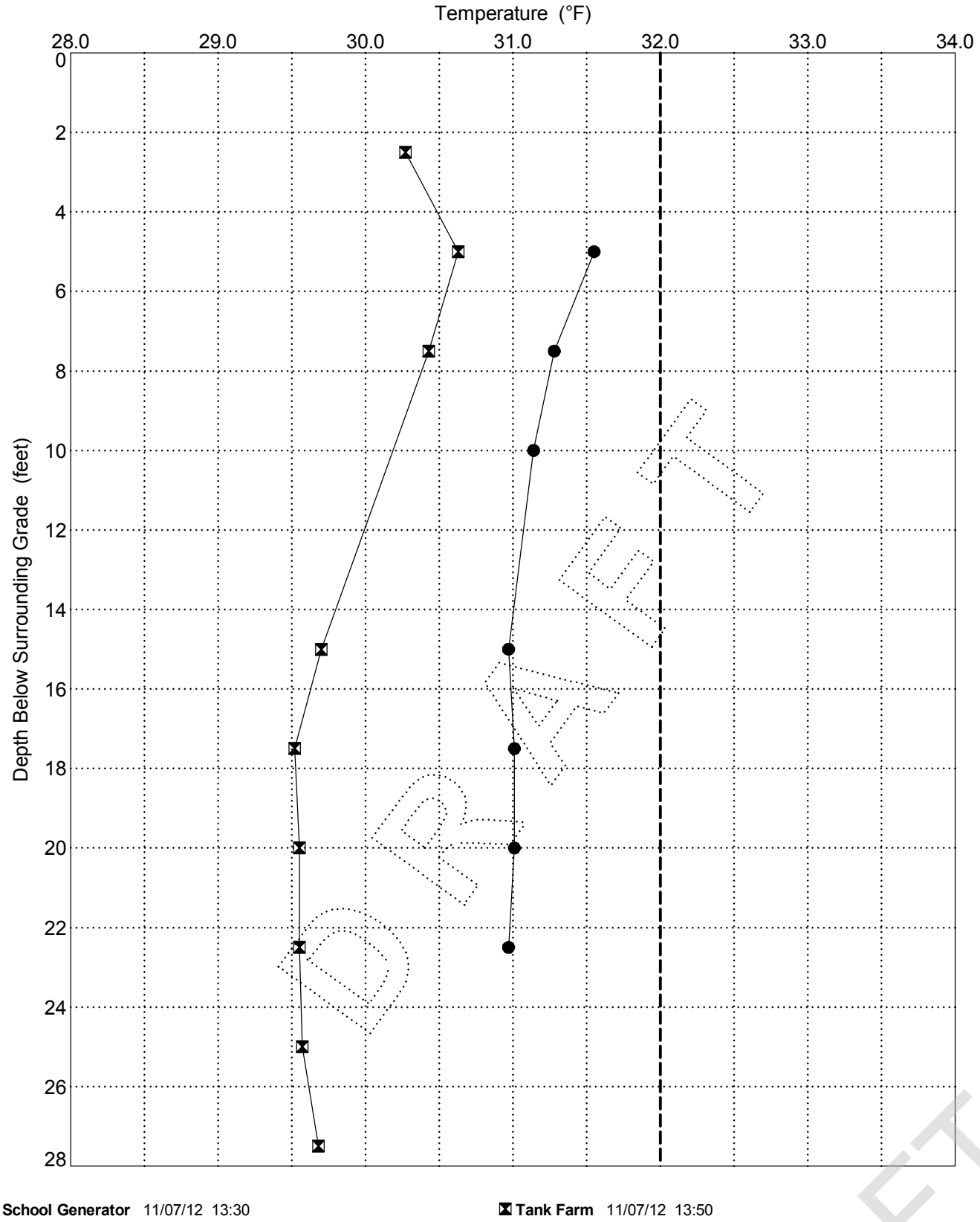

DRAFT

Golder Associates	SCALE	NOT TO SCALE	TITLE
	DESIGN	N/A	**MEASURED GROUND TEMPERATURES**
	CADD	HMB 11/30/12	ATMAUTLUAK POWER PLANT
	CHECK	HMB 11/30/12	ATMAUTLUAK, ALASKA
FILE No. 123-95944 GROUND TEMPS.GPJ	REVIEW	RAM 11/30/12	
PROJECT No. 123-95944	REV.	0	AE&E / ATMAUTLUAK POWER PLANT / AK — FIG. **2**

123-95944 GROUND TEMPS.GPJ LIBRARY-ANC(11-20-12).GLB [ANC THERMISTOR] HBrooks 11/30/12

DRAFT