Conductor and Duct Schedule	Reference to Designation on Plan Drawings	Description	Manufacturer
Primary Cable	Single-phase – 1 conductor Three-phase – 3 conductors	1/0 Aluminum, 133% XLPE insulation, shielded, jacketed, full concentric copper neutral	Southwire HI-DRI or approved equal
Secondary/ Service Cable	All services not individually identified #2 TRI CU 1/0 TRI CU 1/0 QUAD CU	#4 copper XHHW-2 #2 copper XHHW-2 1/0 copper XHHW-2	Southwire or approved equal Southwire or approved equal Southwire or approved equal Southwire or approved equal
Street Light Cable	Street light cables	#8 XHHW-2	Southwire Type TC3 cable or approved equal
Street Light Riser Cable	Street Light Riser Cable	#10 XHHW-2	Duraline or approved equal
Single-phase primary duct	All single phase and three phase primary circuits	2" schedule 40 HDPE	Duraline or approved equal
Service duct	All services	1 1/2" schedule 40 HDPE	Duraline or approved equal
Street Light Circuits	All street light circuits	3/4" SDR 13.5	Duraline or approved equal

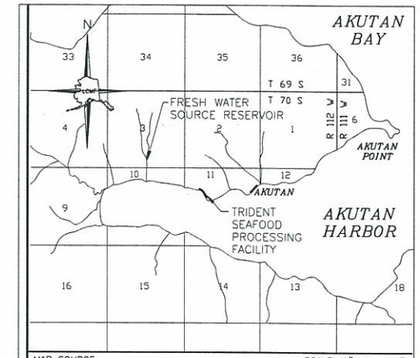

MAP SOURCE:
U.S.G.S. QUAD MAP
UNIMAK (A-6) 1989

VICINITY MAP

SCALE: 1" = 1 MILE

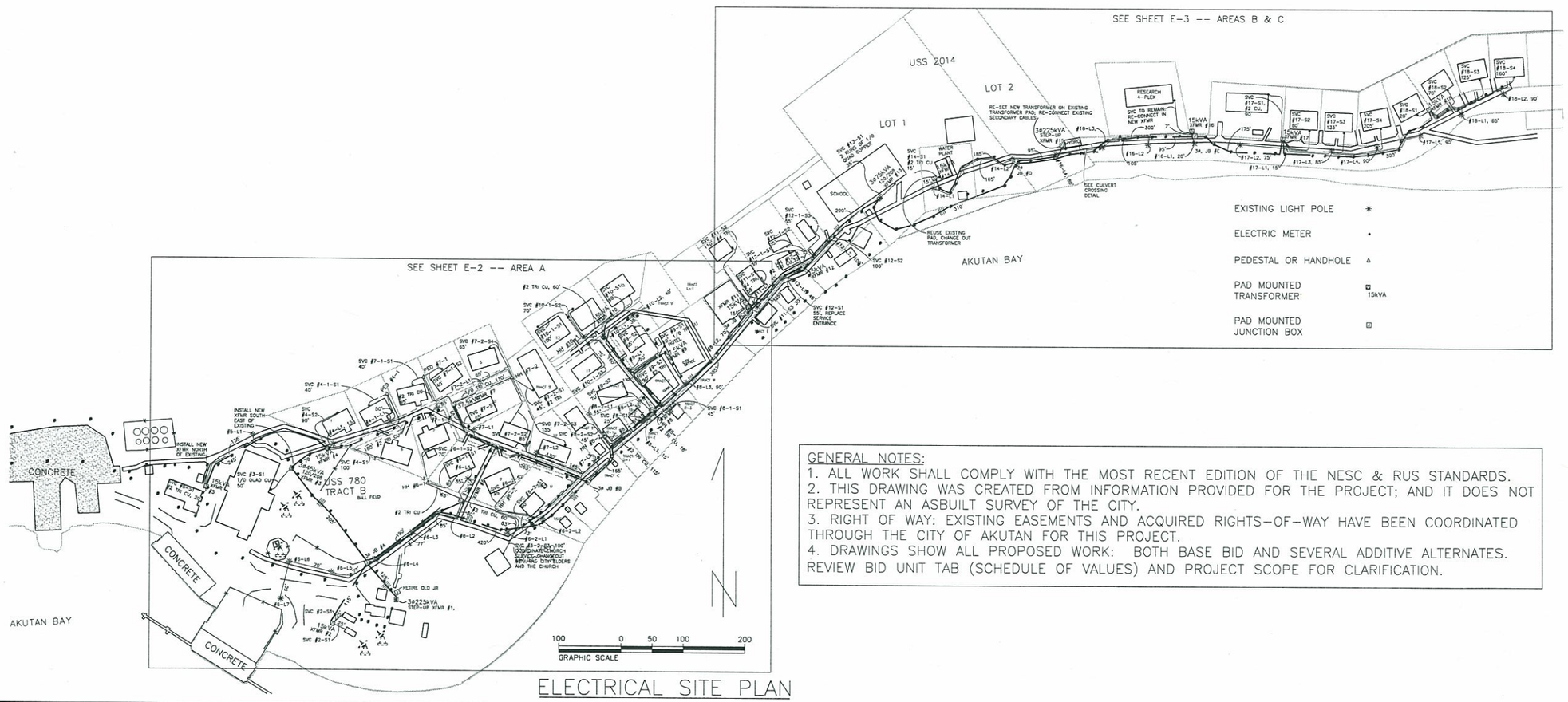

ELECTRICAL SITE PLAN

GENERAL NOTES:
1. ALL WORK SHALL COMPLY WITH THE MOST RECENT EDITION OF THE NESC & RUS STANDARDS.
2. THIS DRAWING WAS CREATED FROM INFORMATION PROVIDED FOR THE PROJECT; AND IT DOES NOT REPRESENT AN ASBUILT SURVEY OF THE CITY.
3. RIGHT OF WAY: EXISTING EASEMENTS AND ACQUIRED RIGHTS-OF-WAY HAVE BEEN COORDINATED THROUGH THE CITY OF AKUTAN FOR THIS PROJECT.
4. DRAWINGS SHOW ALL PROPOSED WORK: BOTH BASE BID AND SEVERAL ADDITIVE ALTERNATES. REVIEW BID UNIT TAB (SCHEDULE OF VALUES) AND PROJECT SCOPE FOR CLARIFICATION.

PROJECT: ELECTRICAL DISTRIBUTION SYSTEM CONVERSION, AKUTAN, ALASKA
DESIGNER/PROJECT ENGINEER: GME
W.O. #: AIDEA-08-007-EEE, NTP-5

NO.	DESIGN/CONSTRUCTION/ASBUILT REVISION	DWN BY/DATE	CHECKED/DATE	APPROVED/DATE
0	ISSUED FOR CONSTRUCTION	11-03-09		
0-1	ISSUED FOR CONSTRUCTION	11-07-09		

OWNER

CONSULTANT

ERRICO ELECTRICAL ENGINEERING, LLC
PO Box 220471
Anchorage, AK 99522
(907) 345-6168
Cell: (907) 242-7669
Email: errico@gci.net

ENG. STAMP
STATE OF ALASKA 49TH
Gregory M. Errico
No. EE-10279
REGISTERED PROFESSIONAL ENGINEER
11/7/09

DRAWING NAME:
ELECTRICAL DISTRIBUTION SYSTEM CONVERSION
TO 7200/12470 AND RELATED UPGRADES
AKUTAN, ALASKA
ELECTRICAL SITE PLAN

FILE NAME:

SHEET NO.: E-1

SHEET 1 OF 6

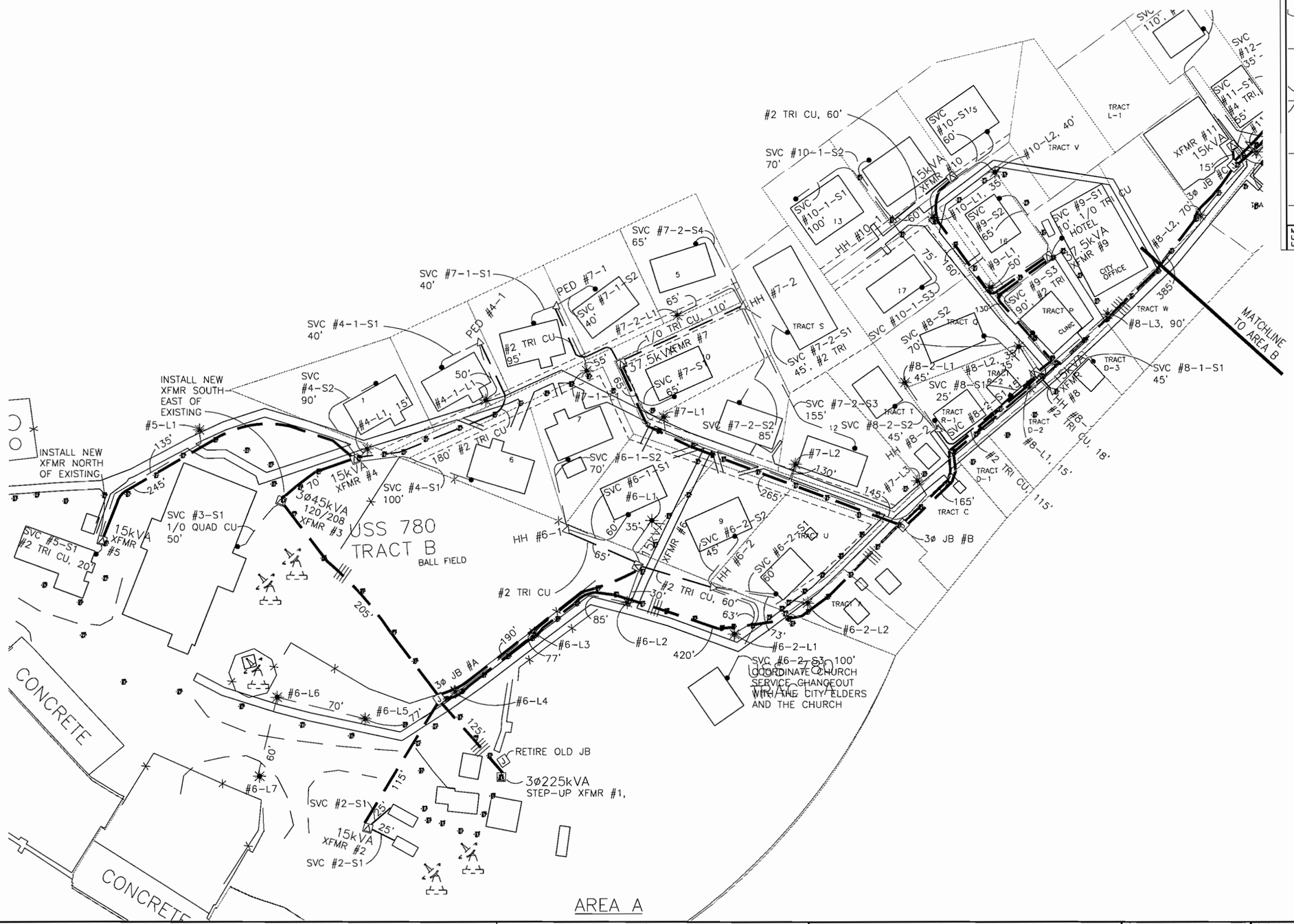

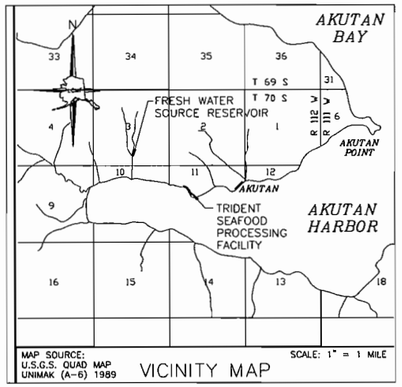

SHEET NOTES:
1. SEE E-1 FOR GENERAL NOTES.

PROJECT: ELECTRICAL DISTRIBUTION SYSTEM CONVERSION, AKUTAN, ALASKA				
DESIGNER/PROJECT ENGINEER: GME		W.O. #: AIDEA-08-007-EEE, NTP-5		
NO.	DESIGN/CONSTRUCTION/ASBUILT REVISION	DWN BY/DATE	CHECKED/DATE	APPROVED/DATE
0	ISSUED FOR CONSTRUCTION	11-03-09		

OWNER

CONSULTANT

ERRICO ELECTRICAL ENGINEERING, LLC
PO Box 220471
Anchorage, AK 99522
(907) 345-6168
Cell: (907) 242-7669
Email: errico@gci.net

ENG. STAMP

STATE OF ALASKA 49TH Gregory M. Errico No. EE-10279 REGISTERED PROFESSIONAL ENGINEER
11/3/09

DRAWING NAME:
ELECTRICAL DISTRIBUTION SYSTEM CONVERSION TO 7200/12470 AND RELATED UPGRADES
AKUTAN, ALASKA
ELECTRICAL SITE PLAN AREA A

FILE NAME:

SHEET NO.: E-2

SHEET 1 OF 6

SHEET NOTES:
1. SEE E-1 FOR GENERAL NOTES.

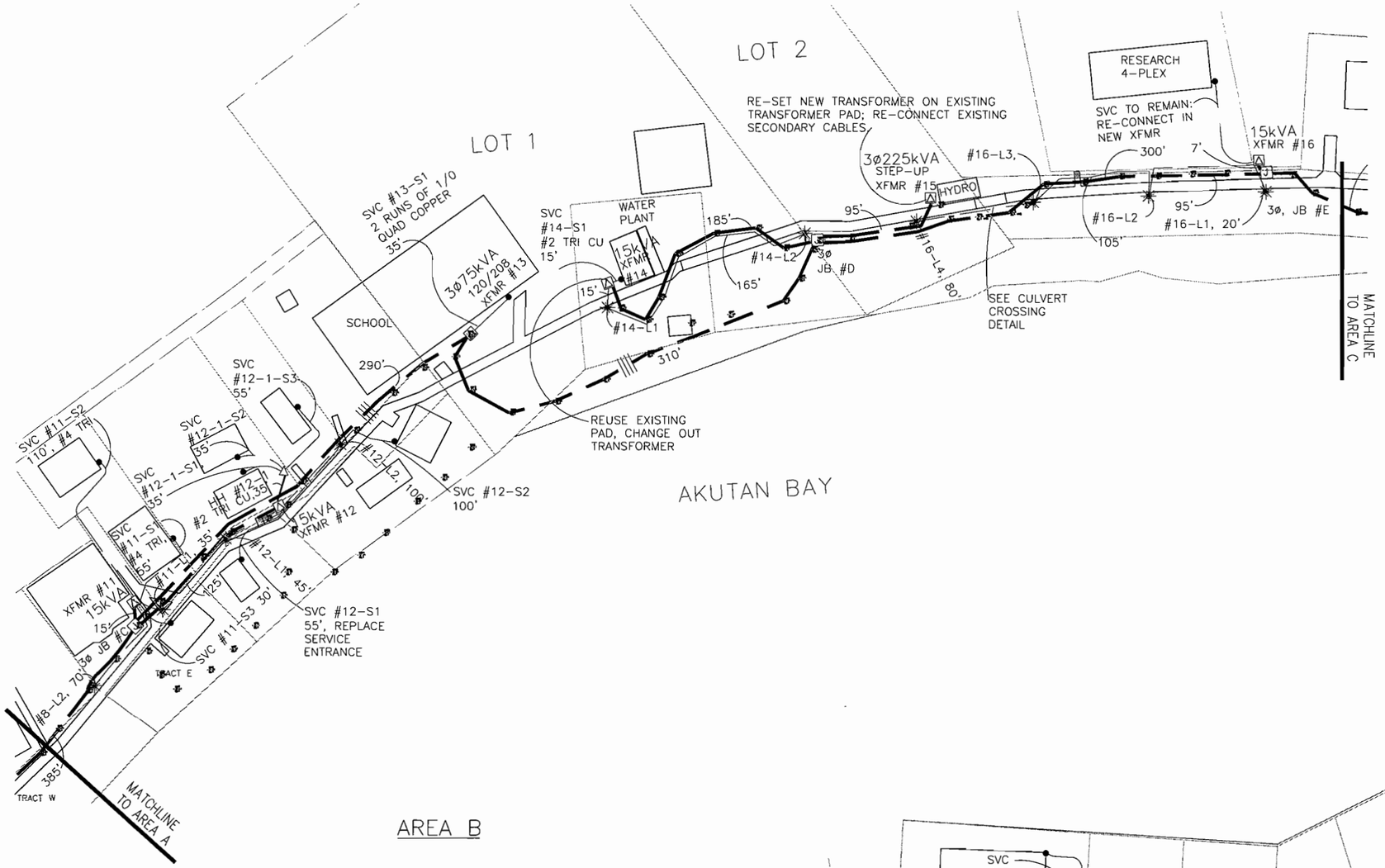

AREA B

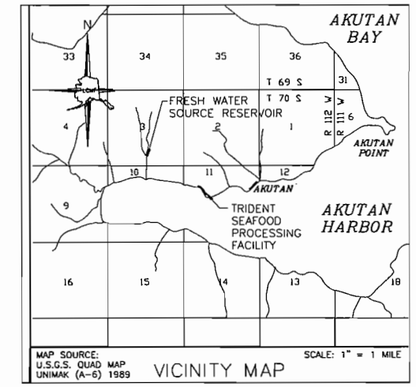

N

EXISTING LIGHT POLE ✳
ELECTRIC METER •
PEDESTAL OR HANDHOLE △
PAD MOUNTED TRANSFORMER [A] 15kVA
PAD MOUNTED JUNCTION BOX [J]

40 0 20 40 80
GRAPHIC SCALE

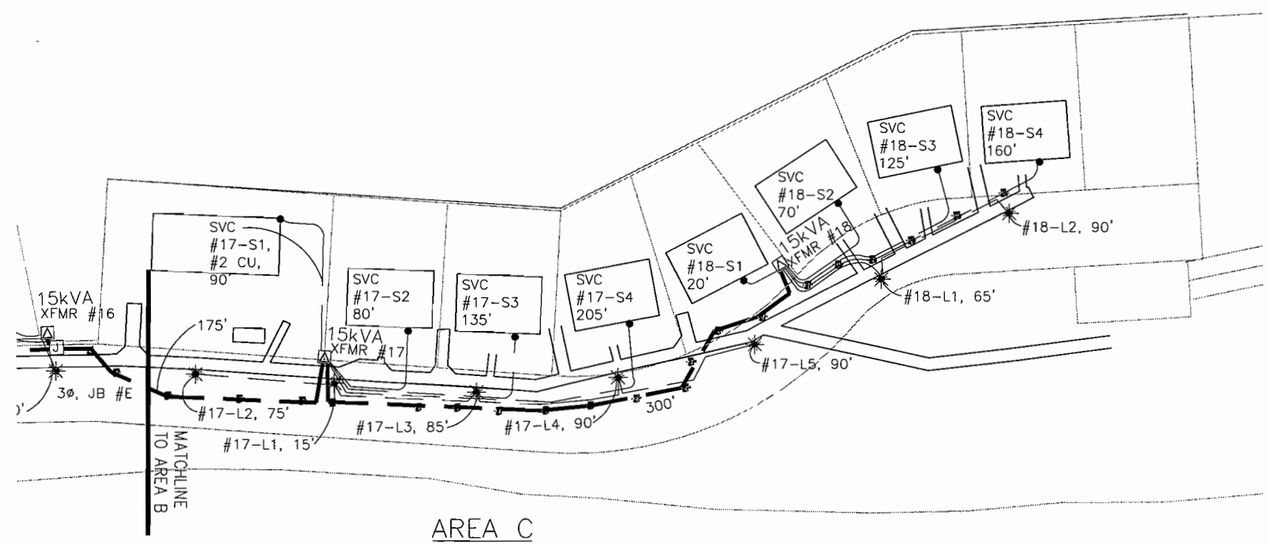

AREA C

PROJECT: ELECTRICAL DISTRIBUTION SYSTEM CONVERSION, AKUTAN, ALASKA
DESIGNER/PROJECT ENGINEER: GME W.O. #: AIDEA-08-007-EEE, NTP-5

NO.	DESIGN/CONSTRUCTION/ASBUILT REVISION	DWN BY/DATE	CHECKED/DATE	APPROVED/DATE
0	ISSUED FOR CONSTRUCTION	11-03-09		

OWNER

CONSULTANT

ERRICO ELECTRICAL ENGINEERING, LLC
PO Box 220471
Anchorage, AK 99522
(907) 345-6168
Cell: (907) 242-7669
Email: errico@gci.net

ENG. STAMP
STATE OF ALASKA 49TH Gregory M. Errico Reg. No. EE-10279 REGISTERED PROFESSIONAL ENGINEER 11/3/09

DRAWING NAME:
ELECTRICAL DISTRIBUTION SYSTEM CONVERSION TO 7200/12470 AND RELATED UPGRADES
AKUTAN, ALASKA
ELECTRICAL SITE PLAN AREA B & C

FILE NAME:

SHEET NO.: E-3

SHEET 1 OF 6

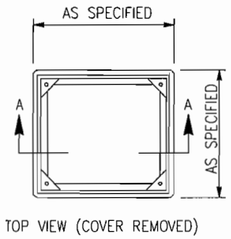

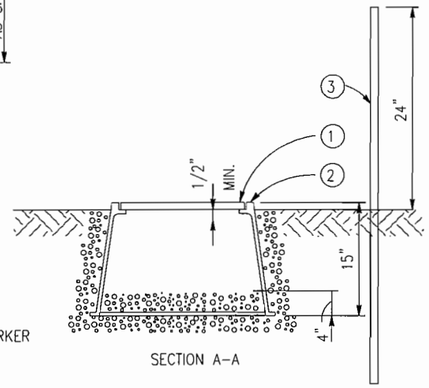

MATERIAL LIST

1. HAND HOLE LID
2. HAND HOLE
3. 48" UG CABLE WARNING MARKER

HAND HOLE

NTS

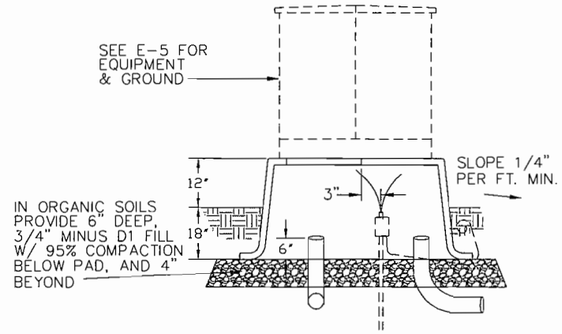

MATERIAL LIST		
Item	Qty.	DESCRIPTION
	1	FIBERGLASS BOX PAD, PROGLASS TX423830 OR APPROVED EQUAL
	2	3/8" STAINLESS STEEL BOLT (LENGTH AS REQUIRED), NUT, WASHER, LOCKNUT

UM1-7NC: 1-PHASE TRANSFORMER FIBERGLASS PAD

NTS

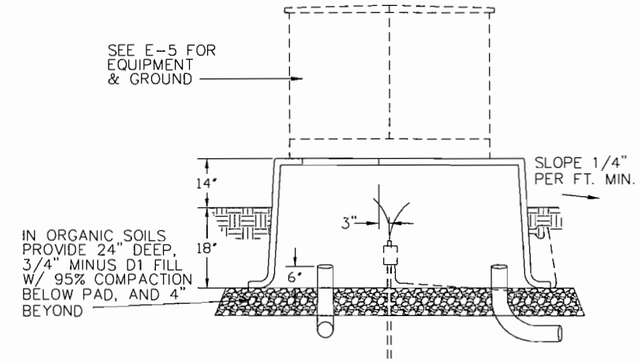

MATERIAL LIST		
Item	Qty.	DESCRIPTION
	1	FIBERGLASS BOX PAD, PROGLASS TX725832 OR APPROVED EQUAL
	4	3/8" STAINLESS STEEL BOLT (LENGTH AS REQUIRED), NUT, WASHER, LOCKNUT

UM1-6NC: 3-PHASE TRANSFORMER FIBERGLASS PAD

NTS

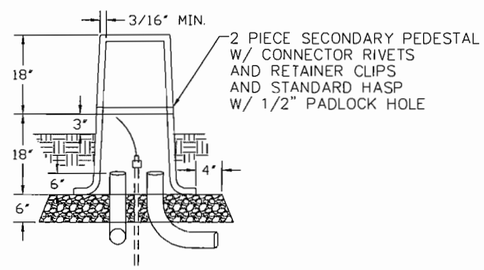

MATERIAL LIST		
Item	Qty.	DESCRIPTION
Ugu-1	1	PEDESTAL, NORDIC FIBERGLASS PSP-91336-MG OR APPROVED EQUAL
Uhw	1	WARNING STICKER
Ugp	3	SIX POSITION, INSULATED CONNECTOR BLOCK
aj	1	GROUND ROD CLAMP
ai	1	GROUND ROD, 5/8" x 8', COPPER CLAD STEEL
cj	–	#2 BARE STRANDED, COPPER, LENGTH AS REQUIRED

FIBERGLASS PEDESTAL

NTS

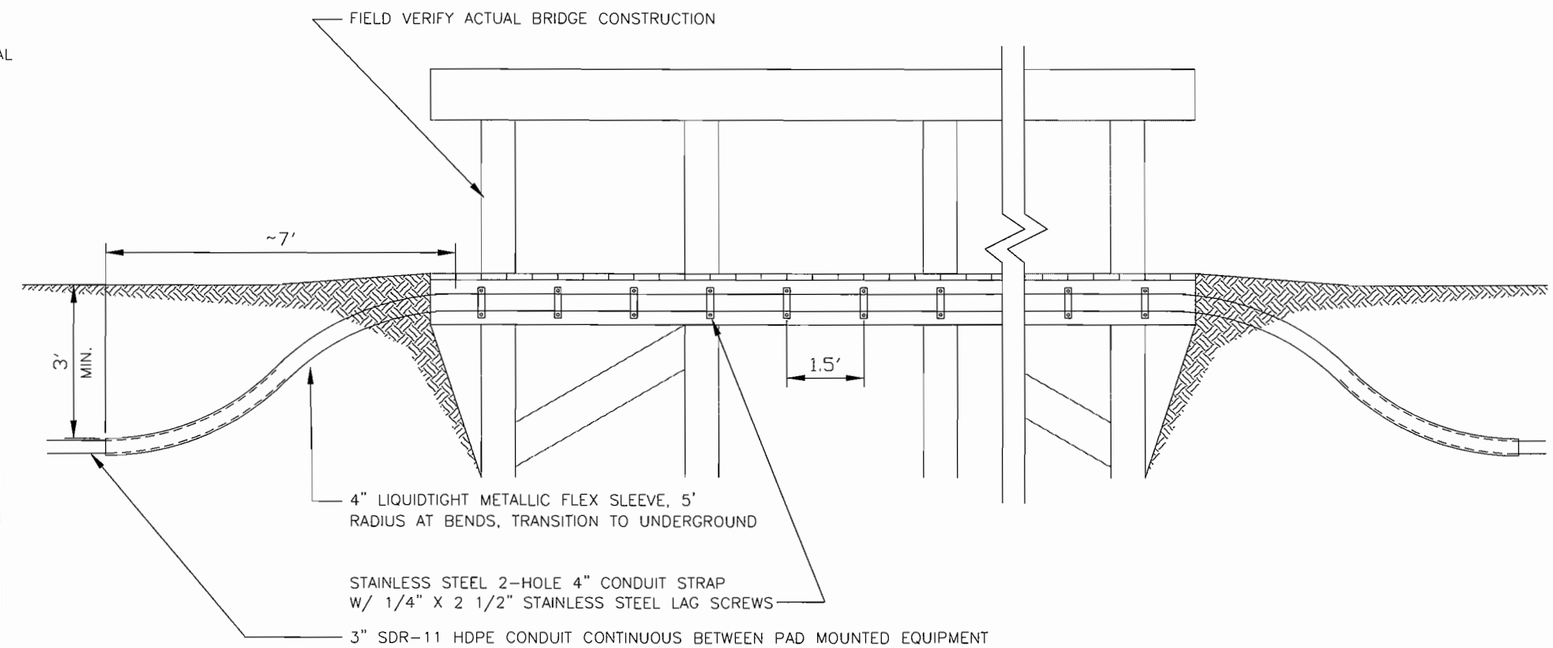

CONDUIT ATTACHMENT TO BRIDGE

NTS

PROJECT: ELECTRICAL DISTRIBUTION SYSTEM CONVERSION, AKUTAN, ALASKA

DESIGNER/PROJECT ENGINEER: GME W.O. #: AIDEA-08-007-EEE, NTP-5

NO.	DESIGN/CONSTRUCTION/ASBUILT REVISION	DWN BY/DATE	CHECKED/DATE	APPROVED/DATE
0	ISSUED FOR CONSTRUCTION	11-03-09		

OWNER

CONSULTANT

ERRICO ELECTRICAL ENGINEERING, LLC
PO Box 220471
Anchorage, AK 99522
(907) 345-6168
Cell: (907) 242-7669
Email: errico@gci.net

ENG. STAMP

STATE OF ALASKA 49TH Gregory M. Errico No. EE-10279 REGISTERED PROFESSIONAL ENGINEER 11/3/09

DRAWING NAME: ELECTRICAL DISTRIBUTION SYSTEM CONVERSION TO 7200/12470 AND RELATED UPGRADES AKUTAN, ALASKA ELECTRICAL DETAILS

FILE NAME:

SHEET NO.: E-4

SHEET 1 OF 6

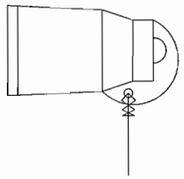

UM6-11: INSULATING CAP W/ GROUND

NTS

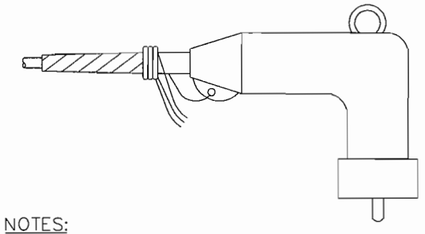

NOTES:
1. USE ONE STRAND OF CONCENTRIC NEUTRAL TO GROUND TERMINATION.
2. INSTALL TERMINATION ON CABLE IN ACCORDANCE WITH MANUFACTURER'S INSTRUCTIONS.
3. OUTDOOR TERMINATION UNIT INCLUDES HARWARE FOR ATTACHMENT TO MOUNTING BRACKETS.
4. LUBRICATE WITH LAYER OF SILICONE GREASE.

UM3-1: 200A LOAD BREAK ELBOW

NTS

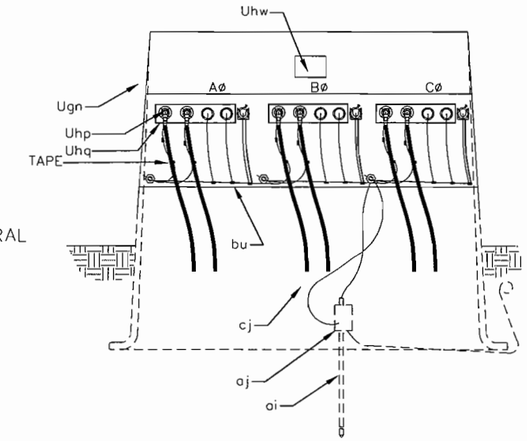

UM3-B: 3-PHASE JB

NTS

NOTES:
1. PROVIDE THREE 4-WAY JUNCTION RECEPTACLES.
2. PROVIDE LOAD-BREAK ELBOW TERMINATIONS.
3. PROVIDE DUST COVERS ON ALL NON-UTILIZED BUSHINGS.
4. PROVIDE STANDOFF BUSHINGS FOR EACH NORMALLY OPEN CABLE.
5. PROVIDE #2 BARE STRANDED COPPER GROUND LOOP.
6. ALL NEUTRALS AND METALLIC NON-CURRENT CARRYING PARTS SHALL BE INTERCONNECTED AND GROUNDED TO THE JUNCTION BOX GROUND LOOP WITH COMPRESSION CONNECTOR.
7. PROVIDE FULL LOOPS IN BASE OF PAD FOR ALL PRIMARY CABLES.
8. PROVIDE SUFFICIENT PRIMARY NEUTRAL GROUND CONNECTION TO PERMIT READY DISCONNECTION OF ELBOW AND MOUNTING ON STANDOFF BUSHING.

MATERIAL LIST

Item	Qty	DESCRIPTION
ai	1	ROD, GROUND, 5/8" X 8'-0", COPPER CLAD
aj	1	CONNECTION, GROUND ROD CLAMP
bu	-	COMPRESSION CONNECTOR, EQUIPMENT GROUND, AS REQ'D
cj	-	GROUND WIRE, #2 BaCuStr, AS REQ'D
Ugn	1	DEADFRONT CABLE JUNCTION PEDESTAL, PROGLASS SE30-41-L2-2415 OR APPROVED EQUAL
Uhw	1 EA.	SIGNS, "DANGER" AND "WARNING"
Uhq	3	MODULE, FEED-THRU, MULTIPOINT, 4-POSITION W/ 2 STAND OFF BRACKETS EA. COOPER LJ215C4B OR APPROVED EQUAL
	-	STAINLESS STEEL FEED-THRU MOUNTING HARDWARE (QTY AS REQUIRED)
	-	CABLE TAGS, AS REQ'D
	-	DECALS/NUMBERS, 3" HIGH, REFLECTIVE, AS REQ'D
	1	EQUIPMENT LOCK, TAMPERPROOF
Uhp	-	ELBOW TERMINATION, AS REQ'D, COOPER LE215 OR APPROVED EQUAL
	-	DUST COVER, AS REQ'D, COOPER LPC215 OR APPROVED EQUAL
	-	STAND-OFF-BUSHING WITH STAINLESS STEEL BRACKET, COOPER ISB215S OR APPROVED EQUAL

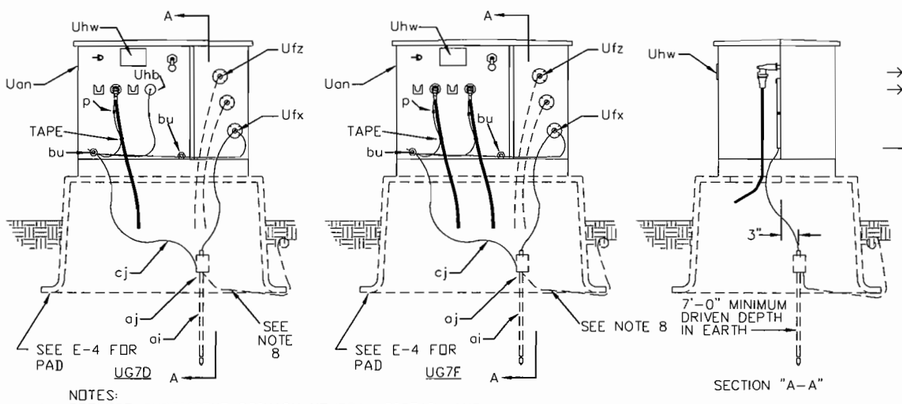

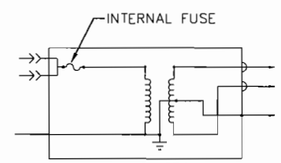

WIRING DIAGRAM
UG7

NOTES:
1. PROVIDE SUFFICIENT PRIMARY NEUTRAL PIGTAIL AND CABLE SLACK TO PERMIT READY DISCONNECTION OF ELBOW AND MOUNTING ON PARKING STAND. TRAIN CABLES TO PROVIDE A FULL LOOP OF CABLES INSIDE PAD.
2. PROVIDE A COMPLETE LOOP OF #2 AWG BaCuSTR TO THE GROUND ROD.
3. GROUND BODIES OF ELBOW CONNECTORS WITH #14 SOLID COPPER.
4. BOND BASE OF BUSHING WELL TO CASE WITH #14 SOLID COPPER.
5. GROUND STAND OFF INSULATOR (IF INSTALLED) WITH #4 AWG BaCuSTR.
6. INSTALL "DANGER" SIGN INSIDE TRANSFORMER ENCLOSURE AND "WARNING" SIGN ON OUTSIDE SURFACE OF ENCLOSURE.
7. TAG PRIMARY AND SERVICE TERMINATIONS. SECURE TAG WITH #37 TAPE.
8. PROVIDE #6 BARE SOLID COPPER EQUIPMENT BONDING CONDUCTOR FOR USE BY TELECOMMUNICATIONS FOR BONDING THEIR ADJACENT PAD MOUNTED EQUIPMENT (LESS THAN 7' AWAY).

MATERIAL LIST

Item	UG7D	UG7F	DESCRIPTION
p			CONNECTOR, COMPRESSION, AS REQ'D
ai	1	1	ROD, GROUND, 5/8" X 8'-0", COPPER CLAD STEEL
aj	2	2	GROUND ROD CLAMP
bu	2	2	TRANSFORMER, CASE GROUND
cj	-	-	GROUND WIRE, #2 AWG BaCuStr, AS REQ'D
Uan	1	1	TRANSFORMER, PADMOUNTED, LOOP FEED, STAINLESS STEEL TANK, Y-Y 7200/240/120, ANSI TYPE 2 RUS APPROVED
Ufz	2	2	CONNECTOR BLOCK, INSULATED, 6-POSTION
Ufx	1	1	CONNECTOR BLOCK, NEUTRAL, 8-POSITION
Uhp	1	2	TERMINATION, ELBOW, LOADBREAK, COOPER LE215, OR EQUAL
Uhb	1	-	INSULATING CAP, AS REQ'D, COOPER LPC215, OR EQUAL
Uhw	1EA	1EA	SIGNS, "DANGER" AND "WARNING"
	-	-	CABLE TAG, AS REQUIRED
	1	1	DECALS/NUMBERS, 3" HIGH, REFLECTIVE, AS REQ'D
	1	1	EQUIPMENT LOCK, TAMPERPROOF, HOMAC ELB 2, OR APPROVED EQUAL

UG7__-____: 1-PHASE TRANSFORMER

NTS

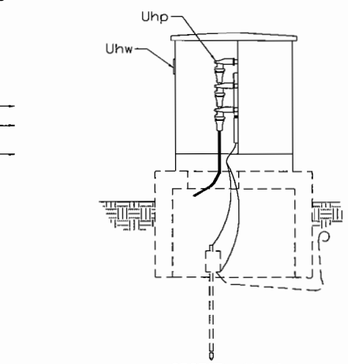

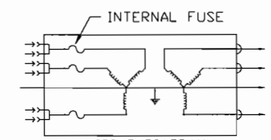

WIRING DIAGRAM
UG17B

NOTES:
1. WYE-WYE CONNECTION SHALL BE USED, EXCEPT FOR STEP-UP TRANSFORMER WHERE DELTA-Y SHALL BE USED.
2. PROVIDE SUFFICIENT PRIMARY CONCENTRIC NEUTRAL TAILS AND TRAIN CABLES TO PERMIT READY DISCONNECTION OF ELBOWS FOR MOUNTING ON PARKING STANDS.
3. PROVIDE A COMPLETE LOOP OF ALL PRIMARY AND SERVICE CABLES IN BASE OF PAD.
4. PROVIDE A COMPLETE LOOP OF #2 AWG BARE STRANDED COPPER AROUND THE WINDOW OF TRANSFORMER; THIS GROUND LOOP IS TO BE ROUTED TO BOTH CASE GROUND AND THE SERVICE NEUTRAL BUSHING.
5. GROUND BODIES OF ELBOW TERMINATIONS WITH #14 SOLID COPPER (IT IS ACCEPTABLE TO USE ONE OF THE CONCENTRIC NEUTRALS FOR THIS).
6. BOND BASE OF BUSHING WELL TO CASE WITH #14 SOLID COPPER.
7. TAG ALL NON-GROUNDING CONDUCTORS.
8. INSTALL "DANGER" SIGN ON INSIDE OF TRANSFORMER ENCLOSURE.
9. INSTALL "WARNING" SIGN ON OUTSIDE SURFACE OF ENCLOSURE.

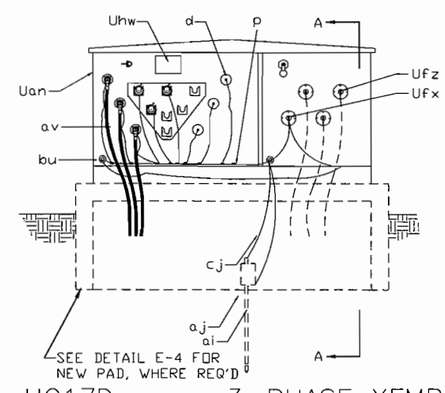

MATERIAL LIST

Item		DESCRIPTION
p	-	Connector, Compression, As Req'd
ai	1	Rod, Ground, 5/8" x 8'-0", Copper Clad Steel
aj	1	Ground Rod Clamp
bu	2	Connector, Equipment Ground
cj	-	Ground Wire, #2 Bare Stranded Copper, As Required
d	3	Dust cover, grounded to loop
Uan	1	Transformer, Padmounted, Three Phase, Loop Feed, Stainless Steel Tank; 300kVA Transformer to be Delta-WYE, 75kVA Transformer to be Y-Y
Ufz	3	Connector Block, Insulated, 6-Position
Ufx	1	Connector Block, Neutral, 8-Position
Uhp	6	Termination, Elbow, Loodbreak
Uhw	2	Signs, "Danger" and "Warning"
	4	Anchors, Concrete, 1/2", w/ anchoring washer
	-	Cable Tag (as required)
	1	Decals/Numbers, 3" High, Reflective, As Req'd
	1	Pad, Lock (Supplied by Owner)
	-	Cold-shrink or Hot-shrink conduit primary cable sealing boot, as req'd

UG17D-____: 3-PHASE XFMR

NTS

PROJECT: ELECTRICAL DISTRIBUTION SYSTEM CONVERSION, AKUTAN, ALASKA
DESIGNER/PROJECT ENGINEER: GME W.O. #: AIDEA-08-007-EEE, NTP-5

NO.	DESIGN/CONSTRUCTION/ASBUILT REVISION	DWN BY/DATE	CHECKED/DATE	APPROVED/DATE
0	ISSUED FOR CONSTRUCTION	10-26-09		

OWNER

CONSULTANT

ERRICO ELECTRICAL ENGINEERING, LLC
PO Box 220471
Anchorage, AK 99522
(907) 345-6168
Cell: (907) 242-7669
Email: errico@gci.net

ENG. STAMP

STATE OF ALASKA — Gregory M. Errico — No. EE-10279 — REGISTERED PROFESSIONAL ENGINEER — 11/2/09

DRAWING NAME:
ELECTRICAL DISTRIBUTION SYSTEM CONVERSION
TO 7200/12470 AND RELATED UPGRADES
AKUTAN, ALASKA
ELECTRICAL DETAILS

FILE NAME:

SHEET NO.: E-5

SHEET 1 OF 6

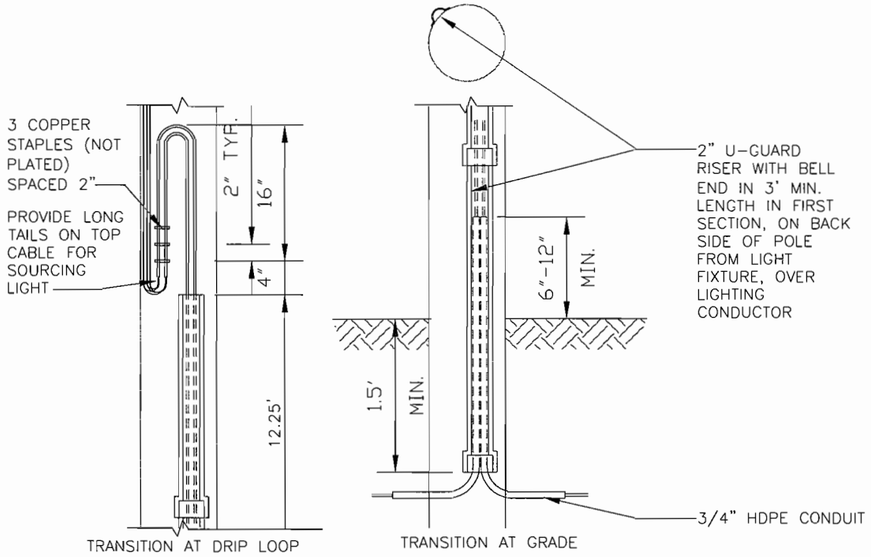

LIGHTING CONDUCTOR U-GUARD RISER DETAIL "SL RISER"

NTS

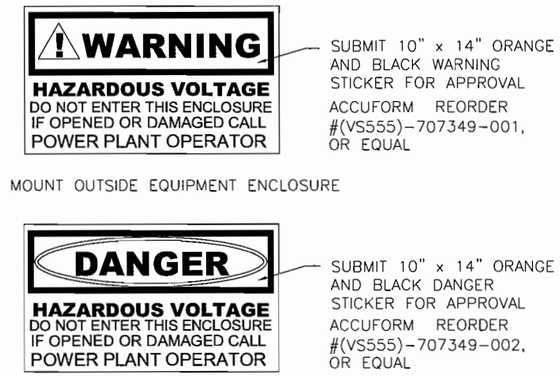

WARNING AND DANGER LABELS

NTS

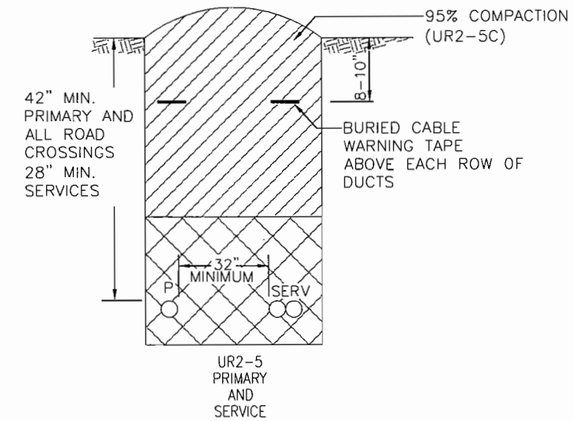

NOTES:
1. DEPTHS SPECIFIED ARE TO FINISHED GRADE.
2. BACKFILLING IS PART OF ALL TRENCHING UNITS. ALL BACKFILL WITHIN 12" OF CABLE OR CONDUIT SHALL BE FREE OF LARGE ROCKS AND FROZEN MATERIAL WHICH MAY CAUSE DAMAGE TO THE INSTALLED CONDUIT. COMPACT BACKFILL IN 12"-18" LIFTS.

LEGEND
- STONE FREE BACKFILL, SAND BED NOT REQUIRED
- COMPACTED BACKFILL (IN 12"-18" LIFTS) UNLESS OTHERWISE SPECIFIED
- UNDISTURBED EARTH

TRENCH DETAIL

NTS

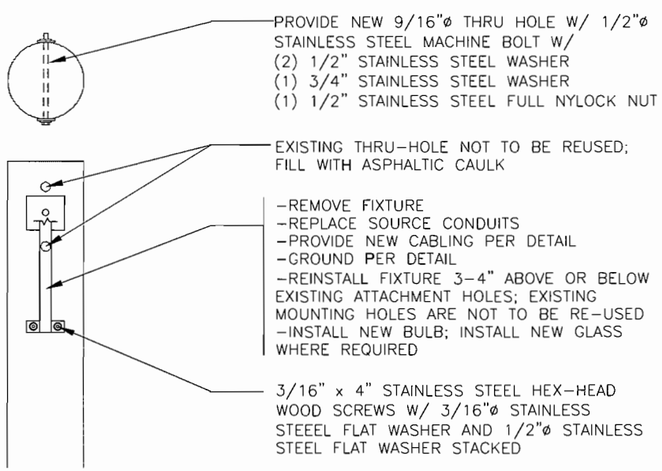

LIGHT FIXTURE MOUNTING DETAIL "REWORK SL"

NTS

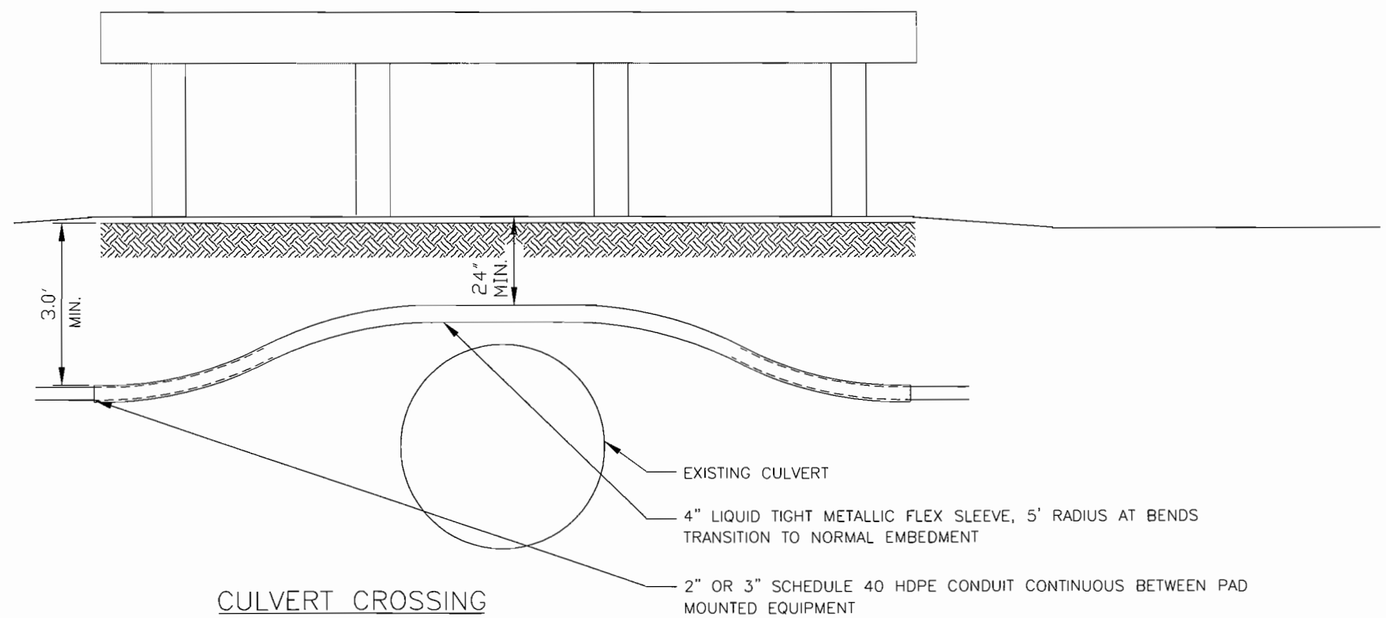

CULVERT CROSSING

NTS

PROJECT: ELECTRICAL DISTRIBUTION SYSTEM CONVERSION, AKUTAN, ALASKA
DESIGNER/PROJECT ENGINEER: GME W.O. #: AIDEA-08-007-EEE, NTP-5

NO.	DESIGN/CONSTRUCTION/ASBUILT REVISION	DWN BY/DATE	CHECKED/DATE	APPROVED/DATE
0	ISSUED FOR CONSTRUCTION	10-26-09		

OWNER

CONSULTANT

ERRICO ELECTRICAL ENGINEERING, LLC
PO Box 220471
Anchorage, AK 99522
(907) 345-6168
Cell: (907) 242-7669
Email: errico@gci.net

ENG. STAMP

STATE OF ALASKA 49TH Gregory M. Errico No. EE-10279 REGISTERED PROFESSIONAL ENGINEER 11/3/09

DRAWING NAME:
ELECTRICAL DISTRIBUTION SYSTEM CONVERSION TO 7200/12470 AND RELATED UPGRADES
AKUTAN, ALASKA
ELECTRICAL DETAILS

FILE NAME:

SHEET NO.: E-6

SHEET 1 OF 6