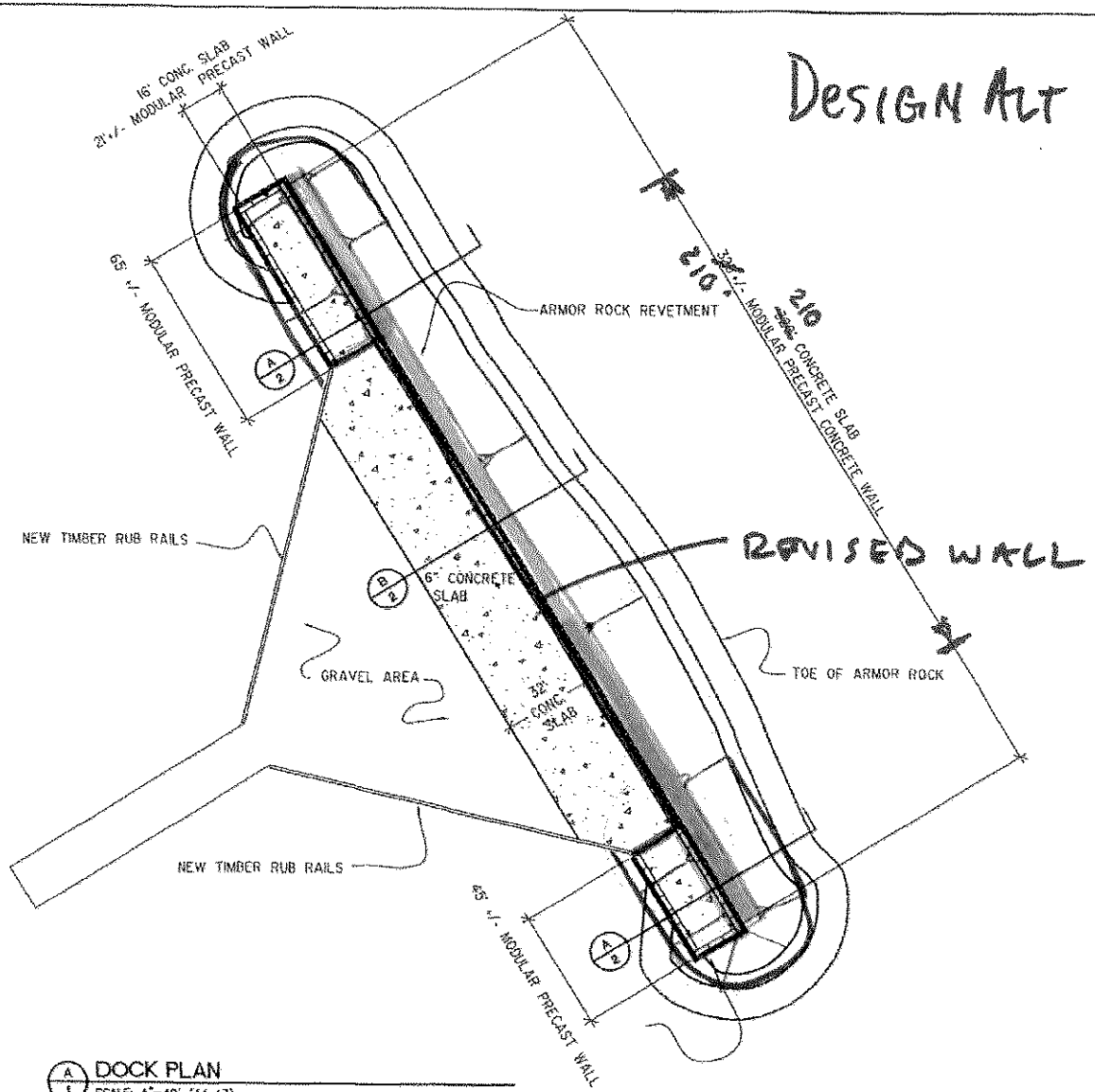

A 1 DOCK PLAN
SCALE: 1"=40' (11x17)

CONCEPT DRAWING—NOT FOR CONSTRUCTION

REVIEW

NO.	REVISION	DATE

CONSULTING ENGINEERS
STRUCTURAL/CIVIL
155 BIDARKA ST
KENAI, AK 99611
TEL. (907) 283-3583
NELSONENGINEERS@ALASKA.NET

NELSON ENGINEERS

ILLIAMNA DOCK REHABILITATION

DOCK PLAN

PROJECT NO.
DRAWN BY: MEH/WJR
CHECKED BY: WJN
DATE: 08/24/13
SCALES: NOTED
HORIZ. NOTED
VERT. NOTED
SHEET 1
1 OF 2

DESIGN ALT 2

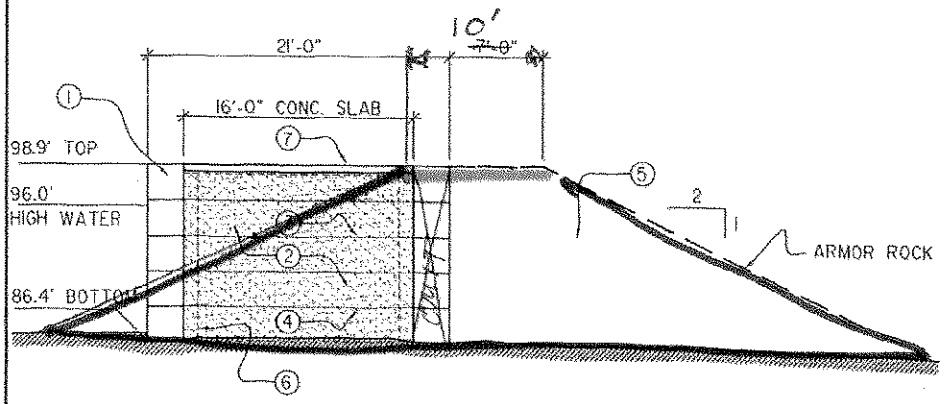

A/2 TYPICAL SECTION
SCALE: 1/8"=1'-0" (11x17)

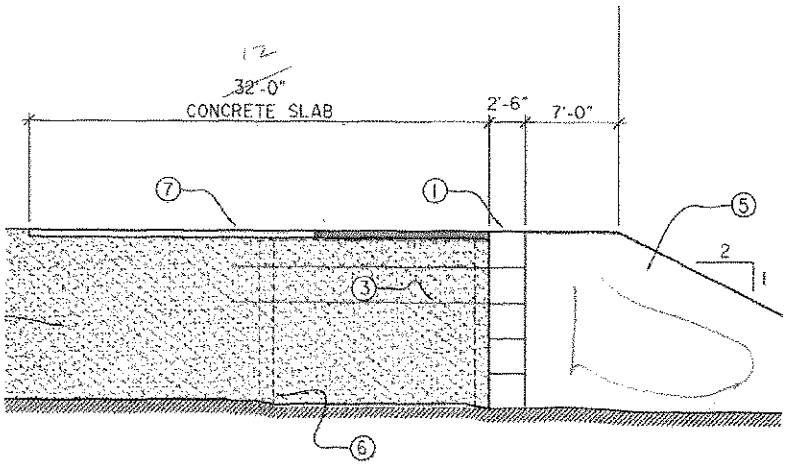

B/2 TYPICAL SECTION
SCALE: 1/8"=1'-0" (11x17)

C/2 GENERAL NOTES

1. 2.5'X2.5'X5' MODULAR PRECAST CONCRETE BLOCK WALL SYSTEM, 5 COURSES HIGH
2. GRAVEL FILL: PLACE IN 2' LIFTS AT BELOW WATER ELEVATION. PLACE IN 1' LIFTS AND COMPACT TO 95% MAX DRY DENSITY AT ABOVE WATER ELEVATIONS.
3. GEOTEXTILE FABRIC PER STRUCTURAL REQUIREMENTS ABOVE WATER LOCATIONS.
4. GALVANIZED STEEL CABLE PER STRUCTURAL REQUIREMENTS AT BELOW WATER LOCATIONS.
5. PROVIDE ARMOR ROCK FROM BOTTOM OF LAKE UP TO TOP OF WALL ON LAKE SIDE AND PROJECTING ENDS, PER DOCK PLAN LOCATION
6. EXISTING PORTIONS OF BIN WALL STRUCTURE THAT INTERFERE WITH CONSTRUCTION WILL BE REMOVED.
7. 6" CONCRETE SLAB ON GRADE WITH 6x6 #8/#8 WELDED WIRE MESH THROUGH OUT AND 1" DEEP CONTROL JOINTS AT 16' OC MAX SPACING.

CONCEPT DRAWING—NOT FOR CONSTRUCTION

REVIEW

NO.	REVISION	DATE

CONSULTING ENGINEERS
STRUCTURAL/CIVIL
1135 BOANA ST.
KENAI, AK 99611
TEL. (907) 283 - 3583
NELSONENGINEERS@ALASKA.NET
NELSON ENGINEERS

ILIAMNA DOCK REHABILITATION

DOCK SECTIONS

PROJECT NO.

DRAWN BY: MEH/WJN
CHECKED BY: WJN
DATE: 06/24/13
SCALES: HORIZ. NOTED
VERT. NOTED
SHEET 2
2 OF 2