State of Alaska

Department of Transportation and Public Facilities
Southeast Region

NAUKATI HARBOR IMPROVEMENTS
NAUKATI, ALASKA

PROJECT No. DC-01048-00 / 69647

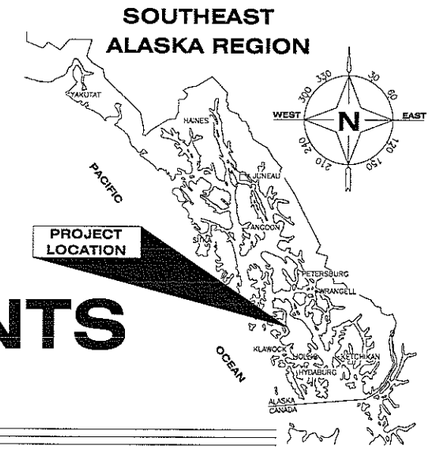

TIDAL DATA	
HTL	+13.8'
MHW	+10.8'
MLLW	0.0'
ELW	-3.5'

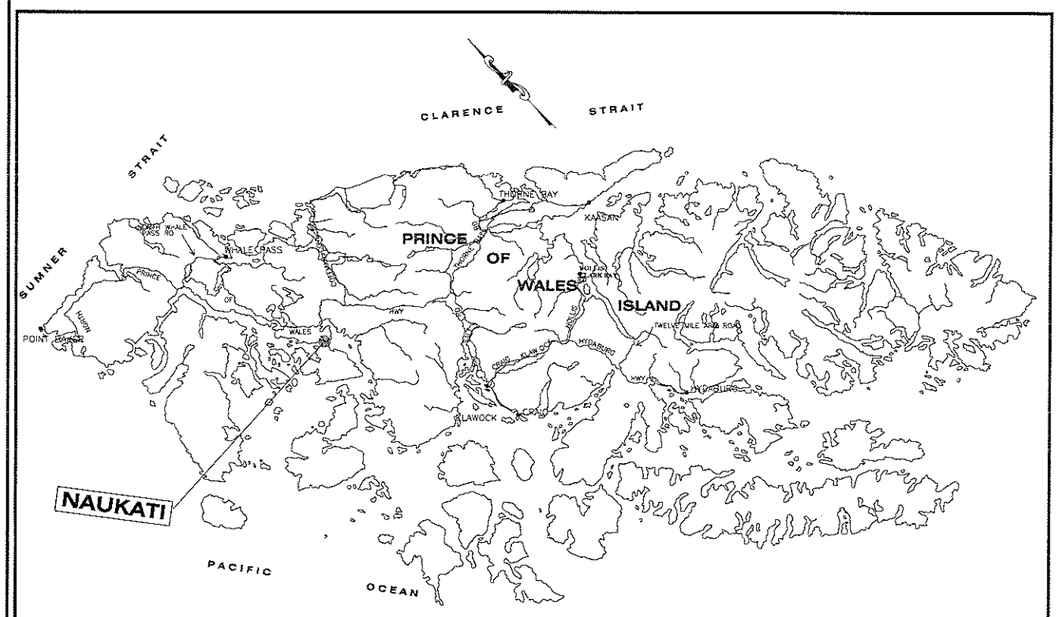

SITE MAP NTS

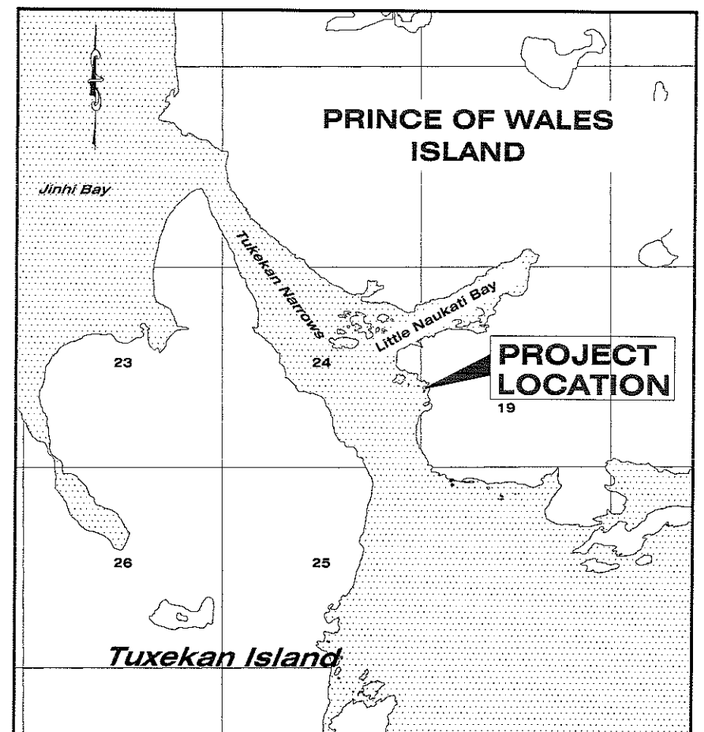

VICINITY MAP NTS

SHEET INDEX

SHEET NO.	DESCRIPTION
01	TITLE SHEET
02	ESTIMATE OF QUANTITIES
03-05	SITE PLAN AND UPLAND DETAILS
06-07	ABUTMENT
08-09	GANGWAY PLAN AND ELEVATION
10-14	GANGWAY SECTIONS AND DETAILS
15	33'x55' SEAPLANE FLOAT
16-24	49'x65' GANGWAY FLOAT
25-27	10'x150' MOORING FLOAT
28-29	3'x22' STALL FLOAT

PATH: Q:\POW\69647\MF\PLANSET\01 TITLE SHEET.DWG TAB:01
Tuesday, May 24, 2011 10:42:03 AM
PLOT: PSPACE OR MSPACE: 1=1(F)

STATE OF ALASKA
DEPARTMENT OF TRANSPORTATION & PUBLIC FACILITIES
SOUTHEAST REGION

STATE OF ALASKA 49th Kirk D. Miller CE-8550 REGISTERED PROFESSIONAL ENGINEER

APPROVED:

REGIONAL PRE-CONSTRUCTION ENGINEER DATE
CHUCK CORREA

APPROVED:

DIRECTOR, SOUTHEAST REGION DATE
AL CLOUGH

CERTIFIED TRUE & CORRECT AS-BUILT OF ACTUAL FIELD CONDITION:

CONSTRUCTION PROJECT MANAGER DATE

STATE	PROJECT DESIGNATION	YEAR	SHEET NO.	TOTAL SHEETS
ALASKA	69647	2011	01	29

ESTIMATE OF QUANTITIES

ITEM NO.	PAY ITEM	UNIT	QUANTITY
202 (1)	REMOVE & DISPOSE OF EXISTING STRUCTURES	LS	ALL REQ'D
504 (1)	18'x106' STEEL BREAKWATER FLOAT	LS	ALL REQ'D
504 (2)	6'x80' ALUMINUM GANGWAY	LS	ALL REQ'D
504 (3)	ALUMINUM TRANSITION PLATES	EA	4
504 (4)	TRESTLE MODIFICATIONS	LS	ALL REQ'D
505 (1)	12 3/4" DIA x 1/2" WALL PIPE PILES, FURNISHED	LF	131
505 (2)	12 3/4" DIA x 1/2" WALL PIPE PILES, DRIVEN	EA	2
505 (3)	16" DIA x 1/2" WALL PIPE PILES, FURNISHED	LF	391
505 (4)	16" DIA x 1/2" WALL PIPE PILES, DRIVEN	EA	5
505 (5)	24" DIA x 1/2" WALL PIPE PILES, FURNISHED	LF	424
505 (6)	24" DIA x 1/2" WALL PIPE PILES, DRIVEN	EA	5
505 (7)	REMOVE & REDRIVE EXISTING 12 3/4" DIA PIPE PILES	EA	2
505 (8)	DRILLED ROCK SOCKET, FURNISHED	LS	ALL REQ'D
505 (9)	DRILLED ROCK SOCKET, INSTALLED	EACH	14
505 (7)	100 LB. PILE ANODE	EA	23
506 (1)	12'x125' TIMBER MOORING FLOAT	LS	ALL REQ'D
506 (2)	10'x100' TIMBER MOORING FLOAT	LS	ALL REQ'D
506 (3)	25'x20' SKIFF FLOAT	EA	2
506 (4)	LEVELING FLOTATION BILLET, 5"x20"x4'-6"L, FURNISHED	EA	8
506 (5)	LEVELING FLOTATION BILLET, INSTALLED	EA	8
506 (6)	CONCRETE BREAKWATER FLOAT REPAIR	LS	ALL REQ'D
506 (7)	FIRE EXTINGUISHER STATION	EA	3
506 (8)	LIFE RING STATION	EA	3
506 (9)	FISH CLEANING STATION TABLE	EA	1
640 (1)	MOBILIZATION & DEMOBILIZATION	LS	ALL REQ'D
640 (4)	WORKER MEALS & LODGING, OR PER DIEM	LS	ALL REQ'D
642 (1)	CONSTRUCTION SURVEYING	LS	ALL REQ'D

GENERAL NOTES

SPECIFICATIONS: PER APPLICABLE CONTRACT DOCUMENTS. SEE SPECIAL PROVISIONS.

DESIGN STANDARDS: AKDOT&PF & SOUTHEAST REGION MARINE ENGINEERING DESIGN STANDARDS
AASHTO

MATERIALS

STEEL:

TUBE SECTIONS: ASTM A500 GRADE B

PILES: STRAIGHT SEAM, ASTM A252 GRADE 3 OR EQUAL.

PIPE: A53, GRADE B, TYPE E OR S

STAINLESS: TYPE 302, 304 OR 316

STEEL SHAPES & PLATES: ASTM A36 OR EQUAL. STRUCTURAL SHAPES FOR PILE CAPS, GIRDERS, GANGWAY SUPPORT BEAMS & LEDGERS SHALL CONFORM TO ASTM A709, GRADE 36. REFERENCE TRESTLE NOTES, SHEET 5.

PILE TIPS: APF 0-14000 OR APF 0-14001 WELDED DRIVE SHOES OR APPROVED EQUAL. DRIVE SHOES ARE REQUIRED ON ALL PILING.

STEEL COATINGS: ALL STEEL FABRICATIONS AND HARDWARE SHALL BE HOT-DIP GALVANIZED AFTER FABRICATION PER ASTM A123 AND A153.

BOLTS AND FASTENERS: ASTM A325 FOR STEEL CONNECTIONS.
ASTM A307 FOR TIMBER CONNECTIONS.

TENSION RODS:
STEEL TENSION RODS FOR TIMBER FLOAT SYSTEMS SHALL BE ALL-THREAD REBAR, WILLIAMS FORM ENGINEERING CORP, GRADE 75 CONFORMING TO ASTM A615 OR APPROVED EQUAL. FURNISHED IN THE NOMINAL DIAMETER AND FULL LENGTH REQUIRED WITHOUT INTERNAL SPLICES. TENSION NUTS SHALL BE 2" IN OVERALL LENGTH. PROVIDE JAM NUT AT ALL CONNECTIONS AFTER INITIAL AND FINAL TENSIONING. ALL TENSION RODS & HARDWARE SHALL BE HOT-DIP GALVANIZED AFTER FABRICATION.

TIMBER:
SAWN TIMBER SHALL BE DOUGLAS FIR, NO. 1 OR BETTER PER WCLIB/WWPA GRADING RULES. SAWN TIMBER DECKING SHALL BE DOUGLAS FIR, NO. 1 OR BETTER PER WCLIB/WWPA GRADING RULES. ALL SAWN TIMBER SHALL BE S4S EXCEPT DECKING (MILLED S1S2E).

GLULAM STRINGERS AND DIAPHRAMS SHALL BE DF/DF, COMBINATION 24F-V8.
GLULAM DECK PANELS, BLOCKING & BACKWALL SHALL BE DF, COMBINATION 2.

UHMW PLASTIC: ULTRA HIGH MOLECULER WEIGHT PLASTIC (UHMW) SHALL BE MADE FROM MATERIALS CONFORMING TO ASTM D4020. COLOR SHALL BE BLACK.

ALUMINUM: SHAPES - ASTM 6061-T6 PLATES - ASTM 5086 H112

METAL DECK GRATING:
STEEL INTERLOCKING DIAGONAL GRID WITH WELDED JOINTS. MAIN RAILS 5-3/16" DEEP AT7-1/2" SPACING WITH SUPPLEMENTAL CROSS AND DIAGONAL BARS. STEEL COMPONENTS SHALL BE ASTM A709, GRADE 50 WITH MINIMUM SECTION MODULUS OF 3.64 IN^3/FT. GRATING SHALL BE HOT DIP GALVANIZED AFTER FABRICATION.

CONCRETE:
CONCRETE SHALL BE CLASS A OR AA IN ACCORDANCE WITH STANDARD SPECIFICATIONS FOR HIGHWAY CONSTRUCTION, SECTION 501 - STRUCTURAL CONCRETE. REFERENCE PLANS FOR DESIGNATIONS. TEXTURE HORIZONTAL SURFACES WITH A HEAVY BROOM FINISH.

EXPANDED METAL WALKWAY:
STANDARD EXPANDED METAL TYPE, 3/4" - #10 SIZE AND HOT DIP GALVANIZED AFTER FABRICATION. SECTIONS SHALL BE PROVIDED IN THE NOMINAL WIDTH SHOWN. AVERAGE PANEL LENGTH (IN DIRECTION OF WALKWAY TRAVEL) SHALL BE 10'. PANELS SHALL BE BOND SHEARED. SUBMIT PROPOSED PANEL LAYOUT PRIOR TO FABRICATION AND INSTALLATION. SHOP CUT HOLES FOR FLOAT TIE-DOWN EYE BOLTS AS REQUIRED. ATTACH EXPANDED METAL PANELS TO DECK SURFACE WITH 1-1/2" LONG GALVANIZED STAPLES. STAPLE AT ALL PANEL CORNERS AND ALONG PANEL EDGES AT 16" OC. ALSO PLACE FOUR STAPLES AROUND PERIMETER OF TIE-DOWN AND AT PANEL INTERIOR LOCATIONS EVERY 24" STAGGERED ROW OR AS DIRECTED BY THE ENGINEER TO MAINTAIN FLATNESS OF PANEL.

WELDING:
UNLESS OTHERWISE NOTED ON PLANS OR SPECIFICATIONS, ALL WELDING SHALL BE DONE BY QUALIFIED WELDERS IN ACCORDANCE WITH AWS D1.1, D1.5, OR AWS D1.2 AS APPLICABLE.

TIMBER TREATMENT:
SAWN TIMBERS FOR MILLED DECKING, BUMPER BOARDS & WHEEL GUARDS SHALL BE TREATED WITH ACZA TO 0.6 PCF RETENTION. GLULAM STRINGERS, DIAPHRAMS & BOTTOM SILLS SHALL BE TREATED WITH CREOSOTE, 12 PCF RETENTION. GLULAM BACKWALL, SUB-DECK PANELS AND BLOCKING SHALL BE TREATED WITH COPPER NAPHTHENATE TO 0.06 PCF RETENTION. GLULAM TIE-DOWN RAILS & WHEEL GUARDS TO BE TREATED WITH ACZA TO 0.6 PCF RETENTION.

POLYSTYRENE FLOTATION:
FLOTATION PLANKS SHALL BE CONSTRUCTED FROM CLOSED CELL EXPANDED POLYSTYRENE (EPS) PER ASTM D1621. MINIMUM DENSITY SHALL BE 1.1 PCF. MATERIALS SHALL HAVE A MAXIMUM WATER ABSORPTION OF 4 PERCENT BY VOLUME IN ACCORDANCE WITH ASTM C272. THE PLANKS SHALL BE CUT AND NOTCHED TO THE NOMINAL DIMENSIONS INDICATED ON THE PLANS. ALL NOTCHES AND CUTS SHALL BE PERFORMED USING A HOT-WIRE OR OTHER APPROVED METHODS.

ALL FLOTATION PLANKS SHALL BE COATED AFTER FABRICATION WITH A POLYURETHANE ELASTOMERIC COATING TO A MINIMUM DRY FILM THICKNESS OF 50 MILS. POLYURETHANE COATINGS SHALL BE "HYDROSEAL 2090" BRAND OR APPROVED EQUAL. ALL FIELD CUTS, NICKS AND ABRASIONS TO THE COATING SHALL BE REPAIRED TO THE SPECIFIED THICKNESS.

TIMBER FLOAT SYSTEMS:
FABRICATE ALL TIMBER MEMBERS TO SIZE PRIOR TO TREATMENT. DRILL ALL BOLT HOLES AND CUT DAPS PRIOR TO PRESSURE TREATMENT (EXCEPT WHERE SPECIFIED). PILOT HOLES FOR LAG SCREW THREADS MAY BE DRILLED AFTER PRESSURE TREATMENT. TREAT ALL FIELD DRILLED HOLES AND CUTS WITH 5% COPPER NAPHTHENATE SOLUTION.

ALL TIMBER BOLTS ARE ECONOMY HEAD TYPE WITH LUGS AND M.I. WASHERS, UNLESS OTHERWISE NOTED. PROVIDE DOUBLE NUTS OR JAM NUT WHEN INDICATED ON PLANS.

RUBBER TIRE BUMPERS: TIRE BUMPERS SHALL BE OF 13-14 INCH NOMINAL RIM SIZE HAVING AN OUTSIDE DIAMETER OF 23-25 INCHES AND A TREAD WIDTH OF APPROXIMATELY 6-INCHES. TIRES SHALL BE GENERALLY OF THE SAME UNIFORM APPEARANCE AND SIZE. ALL TIRES SHALL BE HAVE A MINIMUM OF 1/8-INCH OF "SUMMER TREAD". TIRES WITH STUDS, EXPOSED BELTING OR OTHER VISIBLE SIGNS OF DAMAGE WILL NOT BE ACCEPTED. PRE-DRILL HOLES FOR HARDWARE INSTALLATION. COORDINATE INSTALLATION SO THAT HARDWARE INSTALLATION DOES NOT CONFLICT WITH OTHER FLOAT SYSTEM HARDWARE WHERE REQUIRED.

ALL FABRICATION AND CONNECTION DETAILS ARE NOT SHOWN. PROVIDE DETAILED SHOP DRAWINGS SHOWING ALL MEMBERS, FABRICATION METHODS/SEQUENCE AND LIFTING AND HANDLING DETAILS.

MACHINE OR POWER DRIVEN NAILS WILL NOT BE PERMITTED.

CHAMFER OR BULLNOSE ALL GLULAM AND SAWN TIMBER BULLRAIL CORNERS PRIOR TO TREATMENT.

BUMPER BOARDS SHALL BE PROVIDED IN NOMINAL 16-FOOT LENGTHS. MINIMUM BOARD LENGTHS SHALL BE 10-FEET. NAIL ALL BUMPER BOARDS WITH 20D HOT-DIP GALVANIZED SPIRAL SHANK NAILS AT 12" OC (MAX) STAGGERED ROW AND 2 NAILS AT ENDS. PREDRILL PILOT HOLE TO PREVENT SPLITTING AS REQUIRED.

MILLED DECKING PLACED OVER GLULAM SUBDECKING SHALL BE PROVIDED IN NOMINAL 16-18 FOOT LENGTHS. MINIMUM LENGTH SHALL BE 10-FEET UNLESS OTHERWISE REQUIRED OR PERMITTED. NOTCH/CUT AS REQUIRED TO FIT AROUND PILE COLLAR WELDMENTS AND OTHER ITEMS. SPACE MILLED DECKING 1/4" APART AND NAIL TO GLULAM SUBDECKING WITH 16D HOT-DIP GALVANIZED SPIRAL SHANK NAILS. INSTALL 2 NAILS AT 16" OC (MAX) AND 2 NAILS AT EACH END. PREDRILL PILOT HOLE TO PREVENT SPLITTING AS REQUIRED. STAGGER ADJACENT DECK JOINTS A MINIMUM OF 4-FEET APART.

GLULAM SUB-DECKING SHALL BE SPACED ¼" APART (EXCEPT FOR GANGWAY FLOAT, SEE PLANS) AND SECURED TO EACH STRINGER WITH GALVANIZED LAG SCREWS W/ 1/4"-THICK PLATE WASHERS OF THE SIZE AND SPACING INDICATED. PREDRILL PROPER SIZE SHAFT AND THREAD HOLES. LUBRICATE LAGS PRIOR TO INSTALLATION.

COUNTERBORE FOR ALL BOLT HEADS FACING DECKING TO BE FLUSH OR OTHERWISE COVERED BY OTHER MEMBERS AND WHERE NOTED ON THE PLANS PRIOR TO TREATMENT.

SECURE EXTERIOR GLULAM BLOCKING TO EXTERIOR STRINGERS AND DIAPHRAM MEMBERS WITH 2 EACH, 5/8" DIAM BY 9" L LAGS W/ PLATE OR MI WASHERS (CTSK) WITHIN 12" OF ENDS AND EVERY 2' OC (MAX) STAGGERED ROW OR AS OTHERWISE NOTED ON PLANS OR APPROVED BY THE ENGINEER. SPACE BLOCKING LAGS TO MISS OTHER HARDWARE. ALSO INSTALL ADDITIONAL LAG BOLTS THRU GLULAM SUB-DECK AND INTO EXTERIOR BLOCKING (2 LAGS PER PANEL ALONG EXTERIOR LONG SIDE AND APPROXIMATELY 3'-0" OC ALONG SHORT SIDES).

FABRICATE GLULAM DIAPHRAM MEMBERS WITH 1-1/4" NOMINAL DIAMETER HOLES AT INDICATED DIMENSIONS FOR PASSAGE OF STEEL TENSION RODS. FOR INITIAL TENSIONING, TORQUE TENSION RODS TO MAXIMUM PRACTICAL TENSION WITHOUT CRUSHING TIMBER BEARING SURFACES OR AS OTHERWISE APPROVED BY THE ENGINEER. FOR FINAL TENSIONING, ALL TENSION RODS SHALL BE CHECKED AND NUTS AND JAM NUTS RE-TIGHTENED AFTER THE FLOAT HAS BEEN INSTALLED AND PRIOR TO PROJECT COMPLETION.

DO NOT SCALE FROM THESE DRAWINGS USE DIMENSIONS

REFERNCE LEGEND

NOTES:
1. USE THE SHEET NUMBER WHERE THE REFERENCE IS FOUND WHEN REFERENCING TO A DIFFERENT SHEET.
2. USE A DASH MARK WHEN REFERENCE IS FOUND ON THE SAME SHEET.

ABBREVIATIONS

SS - STAINLESS STEEL
GALV. - GALVANIZED
TYP - TYPICAL
O.C. - ON CENTER
U.O.N. - UNLESS OTHERWISE NOTED
ECON. HD. - ECONOMY HEAD
ALUM - ALUMINUM
L - LONG
W - WIDE
D - DEEP
FG - FINISHED GRADE
O-O - OUT TO OUT
PT - PRESSURE TREATED
BTM - BOTTOM
PL - PLATE
CL - CENTERLINE
CTSK - COUNTERSINK
MI - MALLEABLE IRON

NOTE:
1. ALL ELEVATIONS ARE IN FEET REFERENCED TO MLLW.
2. DRIVE ALL PILES TO ESTIMATED TIP ELEVATION OR REFUSAL.
3. CONICAL CAPS REQUIRED ON ALL EXISTING AND NEW PILES.

CHECKED BY:

STATE OF ALASKA 49th Kirk D. Miller CE-8550 REGISTERED PROFESSIONAL ENGINEER

DESIGNED BY:

DRAWN BY:

STATE OF ALASKA
DEPARTMENT OF TRANSPORTATION
& PUBLIC FACILITIES
SOUTHEAST REGION

NAUKATI HARBOR IMPROVEMENTS PROJECT #69647

PATH: Q:\POW\69647\MF\PLANSET\02-ESTIMATE QUANTITIES.DWG
TAB: 02 Wednesday, July 06, 2011 2:20:03 PM FUNK, JOSEPH R (DOT)

REVISIONS			PROJECT DESIGNATION	YEAR	SHEET NO.	TOTAL SHEETS
NO.	DATE	DESCRIPTION	69647	2011	02	29

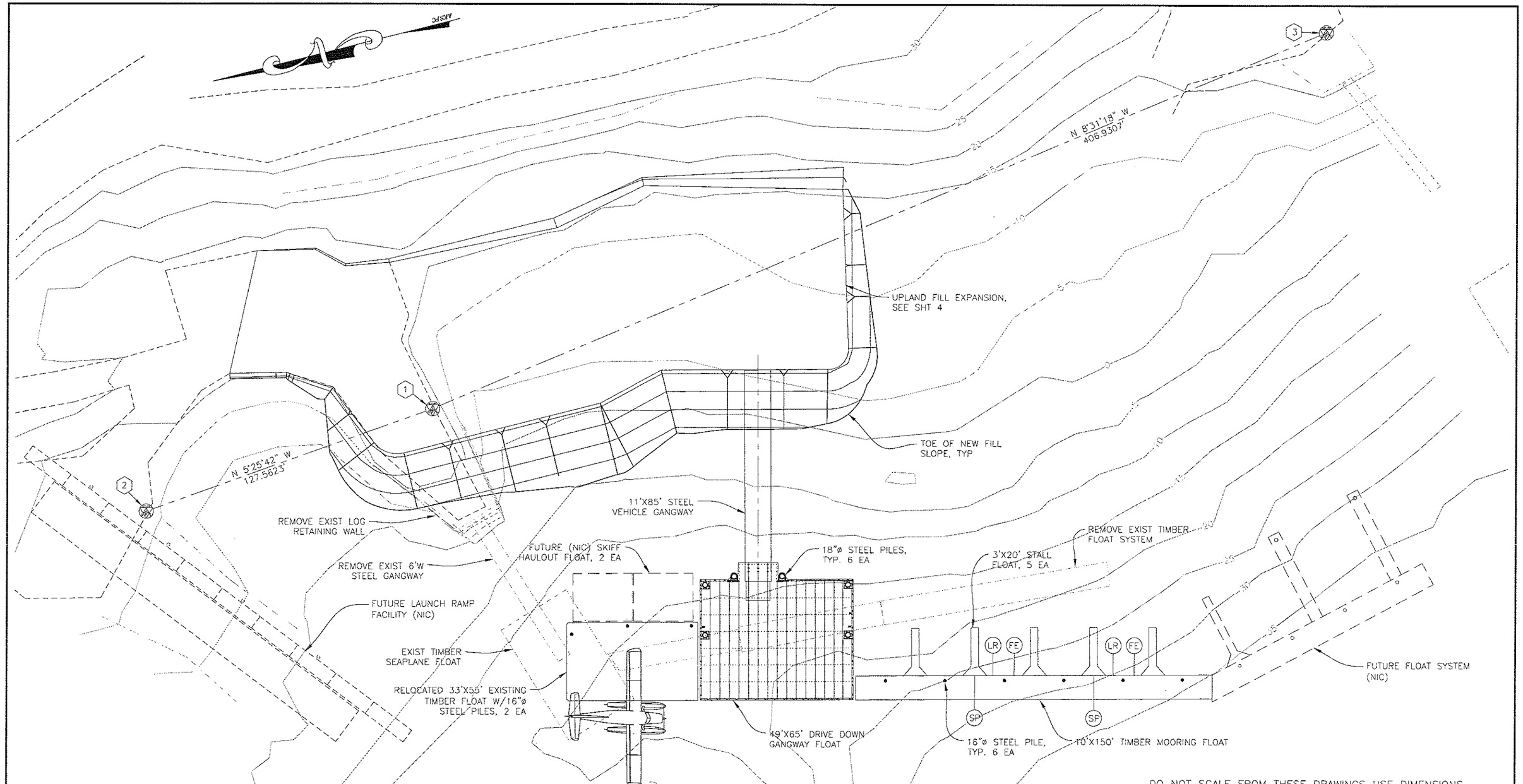

LEGEND:

- • NEW PILE
- (SP) FLOAT SPLICE
- (LR) LIFE RING CABINET
- (FE) FIRE EXTINGUISHER CABINET
- CONTROL POINT

CONTROL POINTS

POINT #	DESCRIPTION	COORDINATES		ELEVATION
1	2" ALUMINUM CAP	N 1474699.6722	E 2778328.4682	15.58'
2	2" ALUMINUM CAP	N 1474826.6624	E 2778316.4006	10.73'
3	2" ALUMINUM CAP	N 1474297.2342	E 2778388.7693	14.64'

DO NOT SCALE FROM THESE DRAWINGS USE DIMENSIONS

CHECKED BY:

STATE OF ALASKA 49th Kirk D. Miller CE-8550 REGISTERED PROFESSIONAL ENGINEER

DESIGNED BY:

DRAWN BY:

STATE OF ALASKA
DEPARTMENT OF TRANSPORTATION
& PUBLIC FACILITIES
SOUTHEAST REGION

NAUKATI HARBOR IMPROVEMENTS PROJECT #69647

SITE PLAN

PATH: Q:\POW\69647\MF\PLANSET\03-04 SITE.DWG
TAB: 03 Tuesday, July 05, 2011 3:28:24 PM FUNK, JOSEPH R (DOT)

REVISIONS			PROJECT DESIGNATION	YEAR	SHEET NO.	TOTAL SHEETS
NO.	DATE	DESCRIPTION	69647	2011	03	29

DO NOT SCALE FROM THESE DRAWINGS USE DIMENSIONS

CHECKED BY: K. MILLER

STATE OF ALASKA 49th Kirk D. Miller CE-8550 REGISTERED PROFESSIONAL ENGINEER

DESIGNED BY: T. DOGGETT

DRAWN BY: C. FUMAN

STATE OF ALASKA
DEPARTMENT OF TRANSPORTATION
& PUBLIC FACILITIES
SOUTHEAST REGION

NAUKATI HARBOR IMPROVEMENTS PROJECT #69647

UPLANDS

PATH: O:\FOW\69647\MF\PLANSET\03-04 SITE.DWG

TAB: 04 UPLANDSTuesday, May 24, 2011 3:48:41 PM FUNK, JOSEPH R (DOT)

REVISIONS			PROJECT DESIGNATION	YEAR	SHEET NO.	TOTAL SHEETS
NO.	DATE	DESCRIPTION				
			69647	2011	04	XX

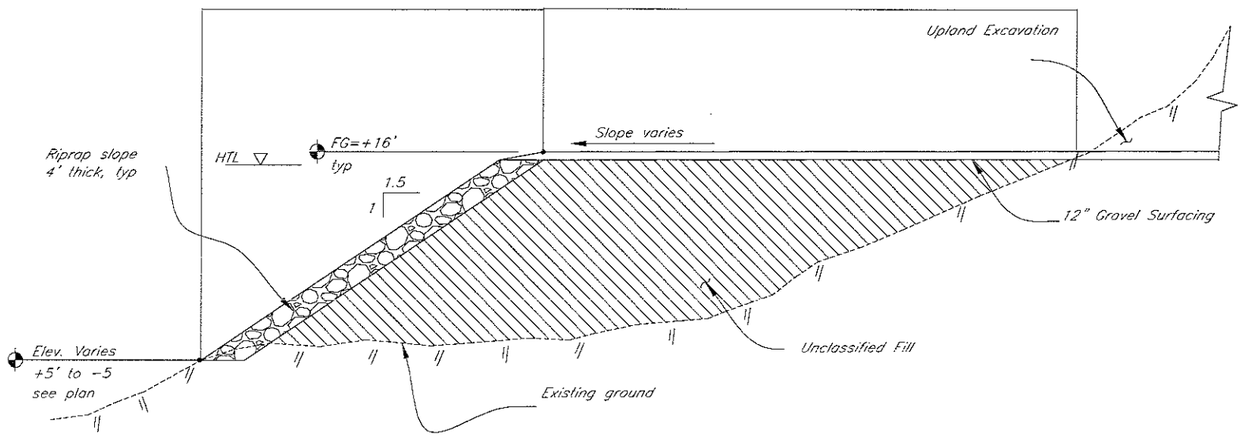

Typ Fill Section

NTS

A / 4

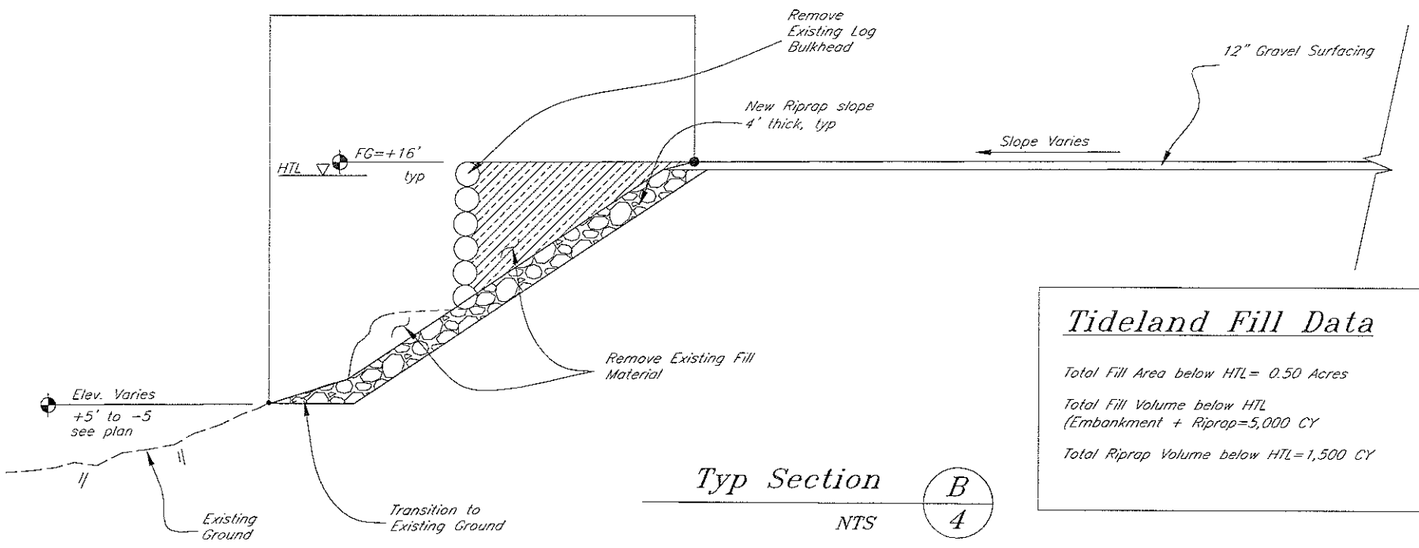

Typ Section

NTS

B / 4

Tideland Fill Data

Total Fill Area below HTL= 0.50 Acres

Total Fill Volume below HTL
(Embankment + Riprap=5,000 CY

Total Riprap Volume below HTL=1,500 CY

DO NOT SCALE FROM THESE DRAWINGS USE DIMENSIONS

CHECKED BY:

STATE OF ALASKA 49th Kirk D. Miller CE-8550 REGISTERED PROFESSIONAL ENGINEER

DESIGNED BY:

DRAWN BY:

STATE OF ALASKA
DEPARTMENT OF TRANSPORTATION
& PUBLIC FACILITIES
SOUTHEAST REGION

NAUKATI HARBOR IMPROVEMENTS PROJECT #69647

UPLAND DETAILS

PATH: Q:\POW\69647\MF\PLANSET\05 UPLAND DETAILS.DWG
TAB: 05 Wednesday, July 06, 2011 2:03:19 PM FUNK, JOSEPH R (DOT)

REVISIONS			PROJECT DESIGNATION	YEAR	SHEET NO.	TOTAL SHEETS
NO.	DATE	DESCRIPTION	69647	2011	05	29

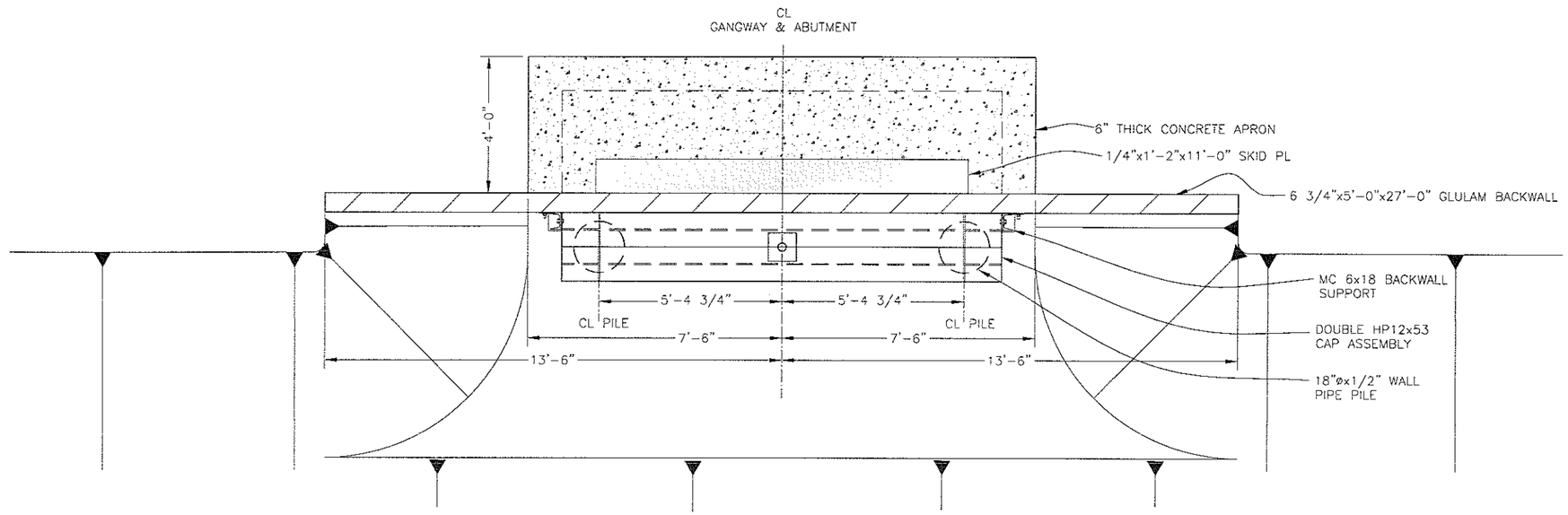

ABUTMENT PLAN

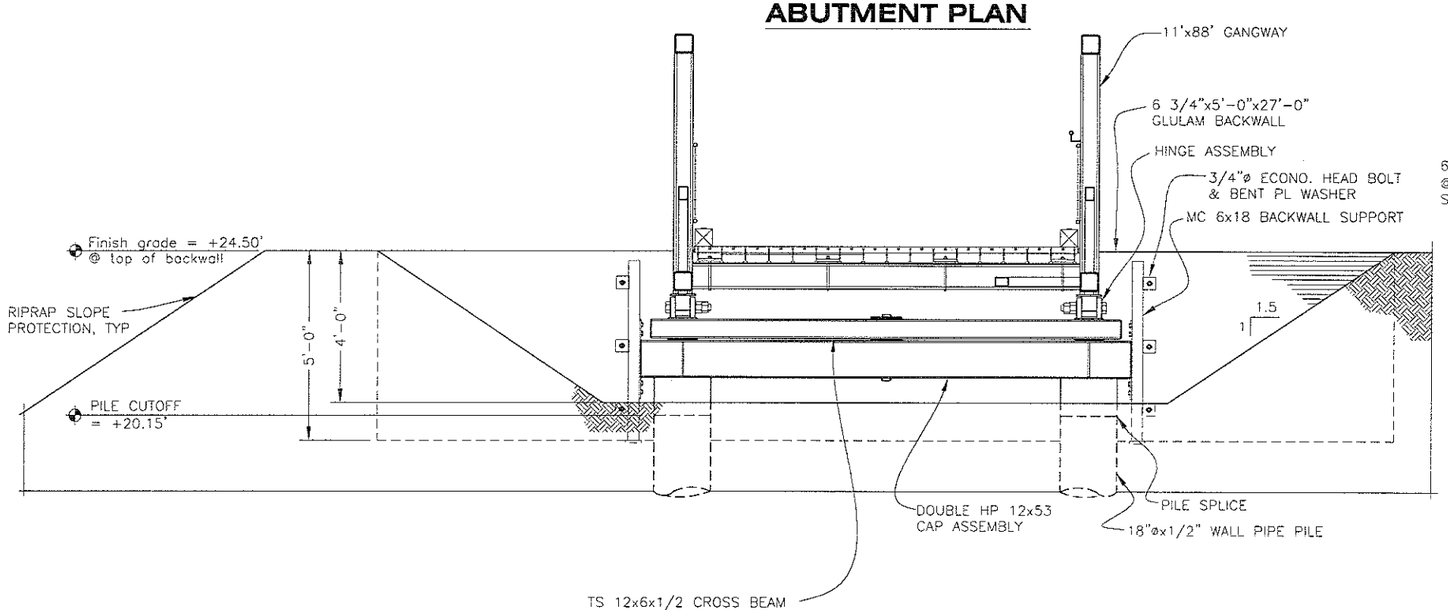

ABUTMENT FRONT VIEW

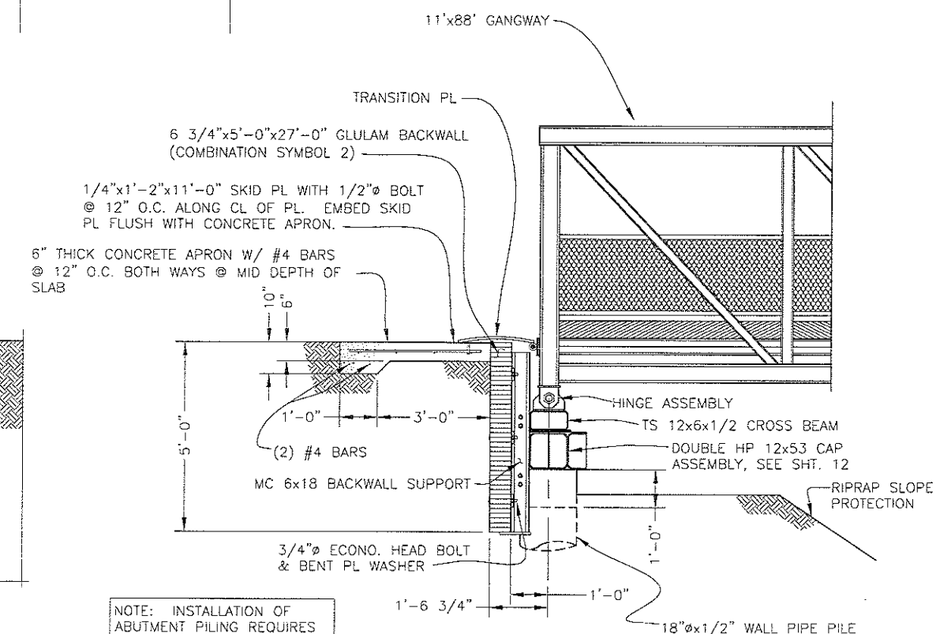

NOTE: INSTALLATION OF ABUTMENT PILING REQUIRES REMOVAL OF EXISTING RIPRAP

ABUTMENT SIDE VIEW

DO NOT SCALE FROM THESE DRAWINGS USE DIMENSIONS

CHECKED BY:

STATE OF ALASKA 49th Kirk D. Miller CE-8550 REGISTERED PROFESSIONAL ENGINEER

DESIGNED BY:

DRAWN BY:

STATE OF ALASKA
DEPARTMENT OF TRANSPORTATION
& PUBLIC FACILITIES
SOUTHEAST REGION

NAUKATI HARBOR IMPROVEMENTS PROJECT #69647

GANGWAY ABUTMENT

PATH: G:\POW\69647\MF\PLANSET\06-ABUTMENT.DWG
TAB: 06 Wednesday, July 06, 2011 2:24:41 PM FUNK, JOSEPH R (DOT)

REVISIONS			PROJECT DESIGNATION	YEAR	SHEET NO.	TOTAL SHEETS
NO.	DATE	DESCRIPTION	69647	2011	06	29

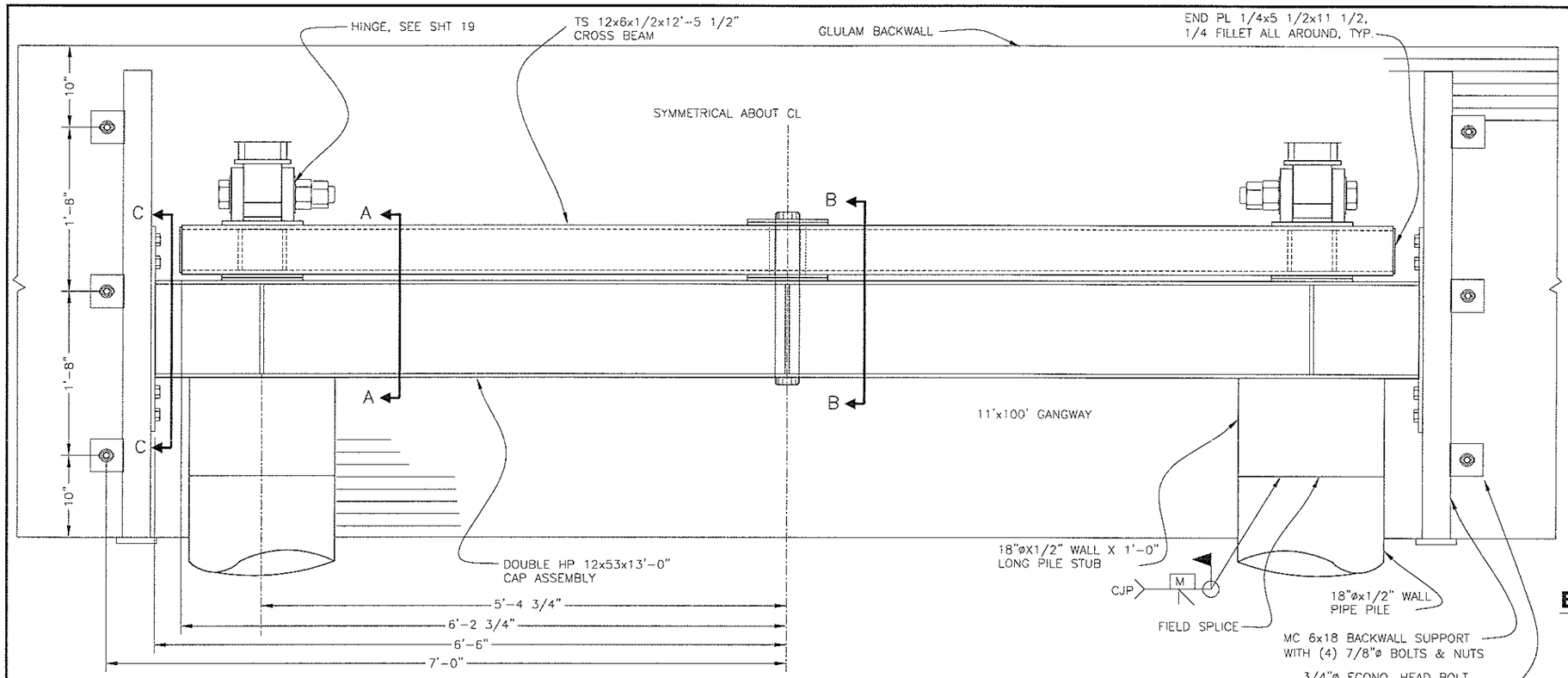

CAP ASSEMBLY & CROSS BEAM ELEVATION

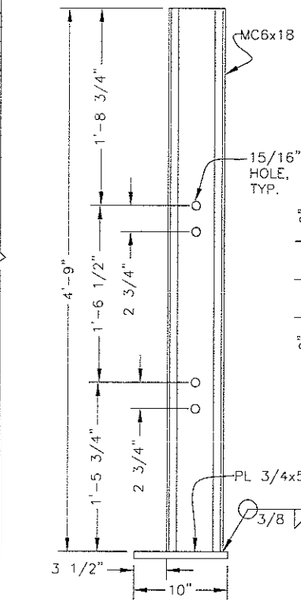

BACKWALL SUPPORT

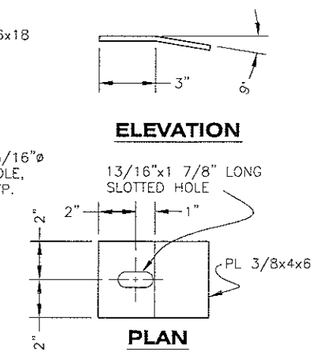

BENT PL WASHER

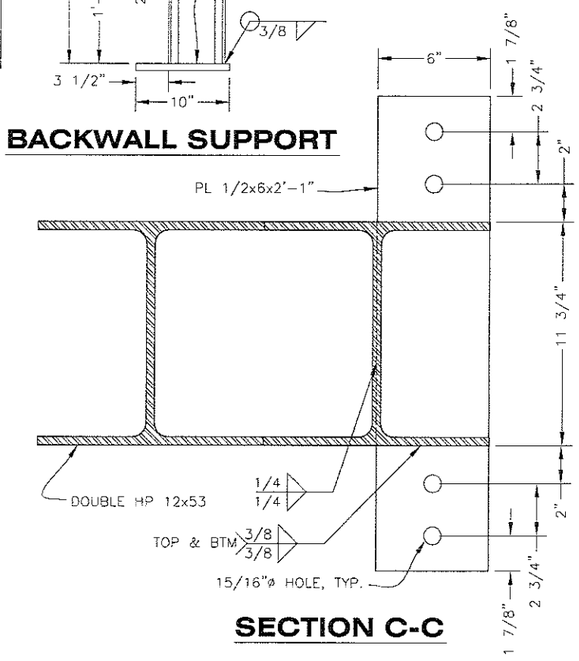

SECTION C-C

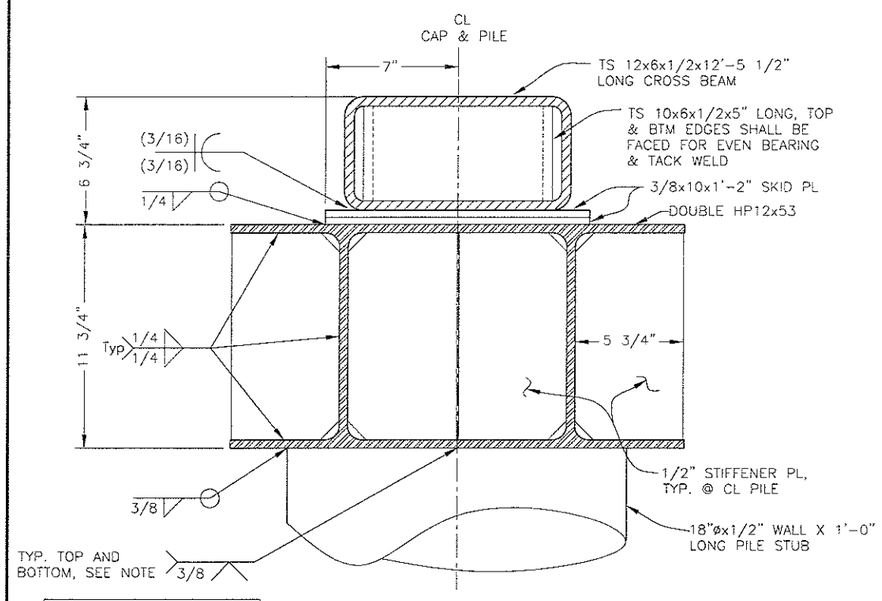

NOTE: GRIND FLUSH AT PILE & SKID PL AREAS

SECTION A-A

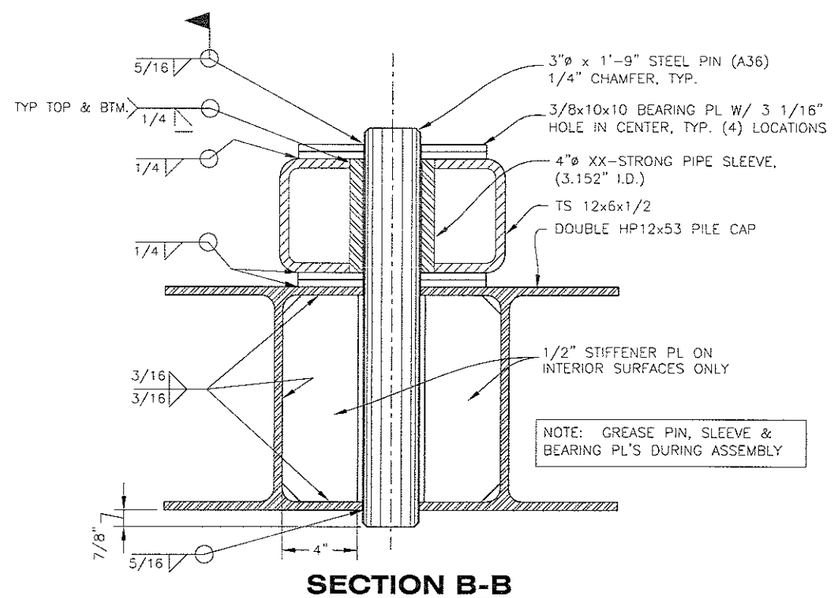

NOTE: GREASE PIN, SLEEVE & BEARING PL'S DURING ASSEMBLY

SECTION B-B

DO NOT SCALE FROM THESE DRAWINGS USE DIMENSIONS

CHECKED BY:

STATE OF ALASKA 49th Kirk D. Miller CE-8550 REGISTERED PROFESSIONAL ENGINEER

DESIGNED BY:

DRAWN BY:

STATE OF ALASKA
DEPARTMENT OF TRANSPORTATION
& PUBLIC FACILITIES
SOUTHEAST REGION

NAUKATI HARBOR IMPROVEMENTS PROJECT #69647

GANGWAY ABUTMENT DETAILS

PATH: Q:\POW\69647\MF\PLANSET\07-ABUTMENT DETAILS.DWG
TAB: 07 Wednesday, July 06, 2011 2:25:56 PM FUNK, JOSEPH R (DOT)

REVISIONS			PROJECT DESIGNATION	YEAR	SHEET NO.	TOTAL SHEETS
NO.	DATE	DESCRIPTION	69647	2011	07	29

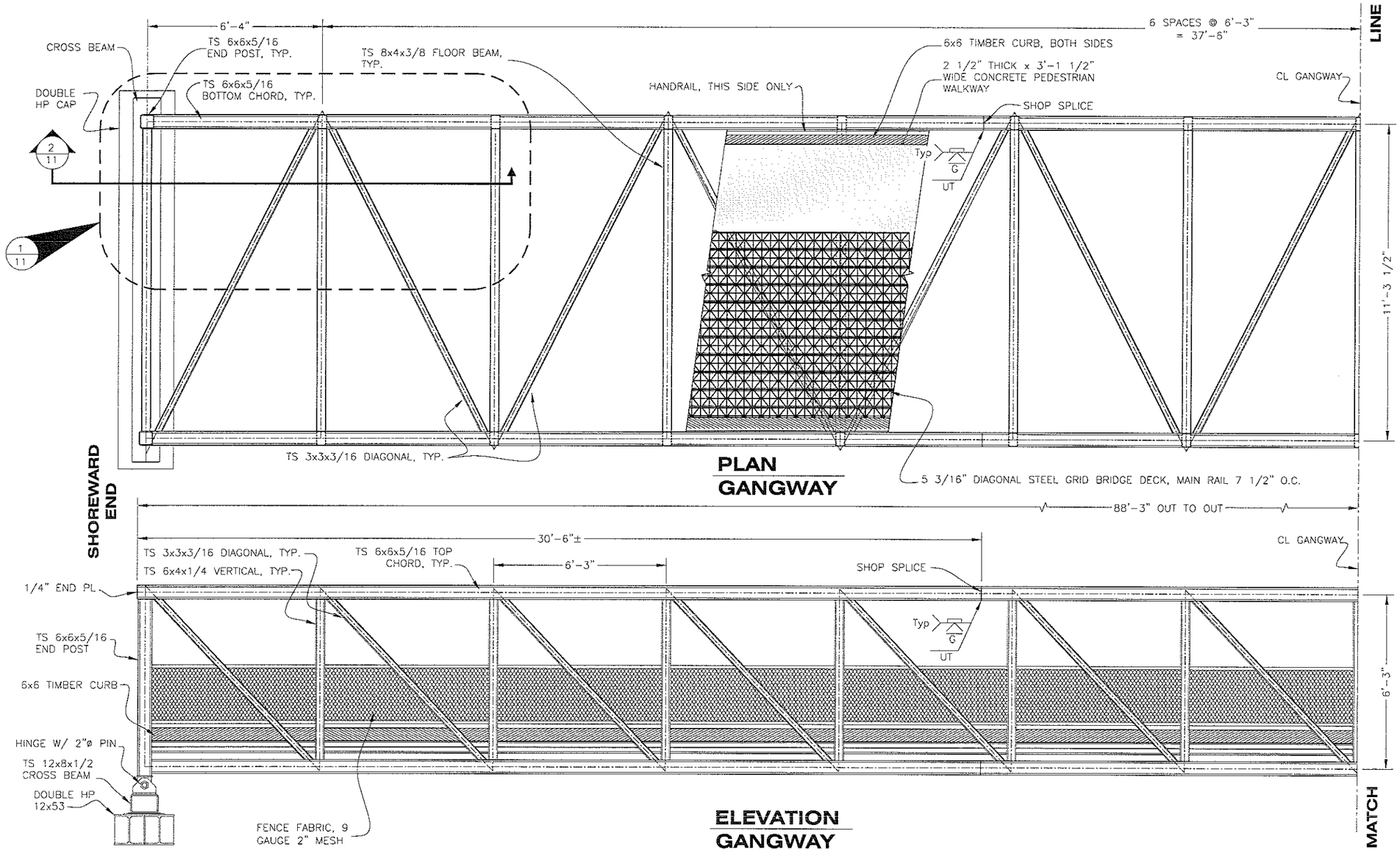

GENERAL NOTES:

1. DESIGN BASIS IS AASHTO STANDARD SPECIFICATIONS FOR HIGHWAY BRIDGES AS MODIFIED BY GUIDE SPECIFICATIONS FOR DESIGN OF PEDESTRIAN BRIDGES. DESIGN LIVE PEDESTRIAN LOAD IS 85 PSF (REDUCED TO 65 PSF WHERE PERMITTED BY AASHTO) AND LIVE VEHICLE LOAD IS AASHTO H10 TRUCK.
2. ALL STEEL PIPE AND STRUCTURAL TUBING SHALL CONFORM TO ASTM A53 GRADE B AND ASTM A500 GRADE B, RESPECTIVELY. ROLLED STEEL SHAPES AND MISCELLANEOUS PLATES SHALL CONFORM TO ASTM A36.
3. NO BOTTOM CHORD SPLICES MAY BE LOCATED IN THE MIDDLE THIRD OF THE SPAN.
4. CAMBER TO COMPENSATE FOR DEAD LOAD DEFLECTION (SEE CAMBER DIAGRAM).
5. SHIP ASSEMBLED. APPROXIMATE WEIGHT = 60,000 LBS.
6. ALL WELDS JOINING TUBULAR MEMBERS AND END PLATES ARE TO SEAL THE JOINT.
7. ALL STEEL SURFACES TO BE HOT DIP GALVANIZED.

DO NOT SCALE FROM THESE DRAWINGS USE DIMENSIONS

CHECKED BY:

STATE OF ALASKA 49th Kirk D. Miller CE-8550 REGISTERED PROFESSIONAL ENGINEER

DESIGNED BY:

DRAWN BY:

STATE OF ALASKA
DEPARTMENT OF TRANSPORTATION
& PUBLIC FACILITIES
SOUTHEAST REGION

NAUKATI HARBOR IMPROVEMENTS PROJECT #69647

GANGWAY SHOREWARD END

PATH: G:\POW\69647\MF\PLANSET\08-GANGWAY 1.DWG
TAB: 08 Wednesday, July 06, 2011 2:27:26 PM FUNK, JOSEPH R (DOT)

REVISIONS			PROJECT DESIGNATION	YEAR	SHEET NO.	TOTAL SHEETS
NO.	DATE	DESCRIPTION	69647	2011	08	29

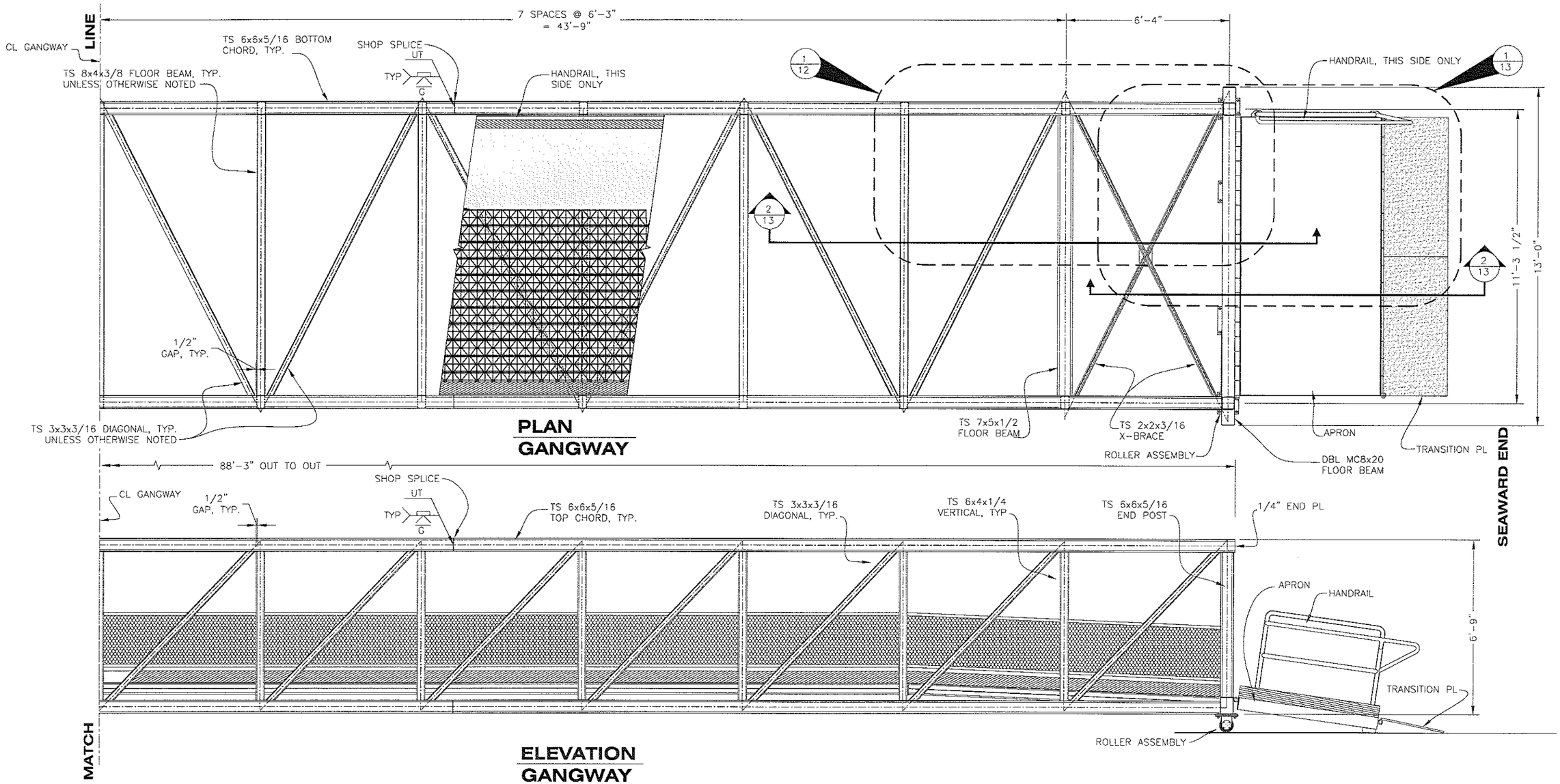

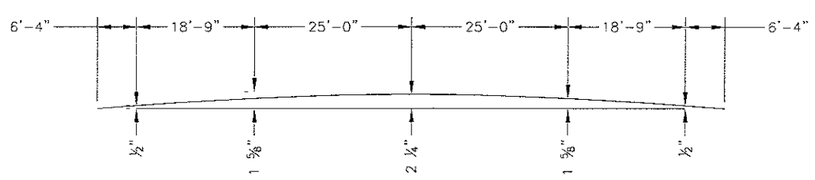

CAMBER DIAGRAM

DO NOT SCALE FROM THESE DRAWINGS USE DIMENSIONS

CHECKED BY:

STATE OF ALASKA 49th Kirk D. Miller CE-8550 REGISTERED PROFESSIONAL ENGINEER

DESIGNED BY:

DRAWN BY:

STATE OF ALASKA
DEPARTMENT OF TRANSPORTATION
& PUBLIC FACILITIES
SOUTHEAST REGION

NAUKATI HARBOR IMPROVEMENTS PROJECT #69647

GANGWAY SEAWARD END

PATH: Q:\POW\69647\MF\PLANSET\09-GANGWAY 2.DWG
TAB: 09 Wednesday, July 06, 2011 2:28:29 PM FUNK, JOSEPH R (DOT)

REVISIONS			PROJECT DESIGNATION	YEAR	SHEET NO.	TOTAL SHEETS
NO.	DATE	DESCRIPTION	69647	2011	09	29

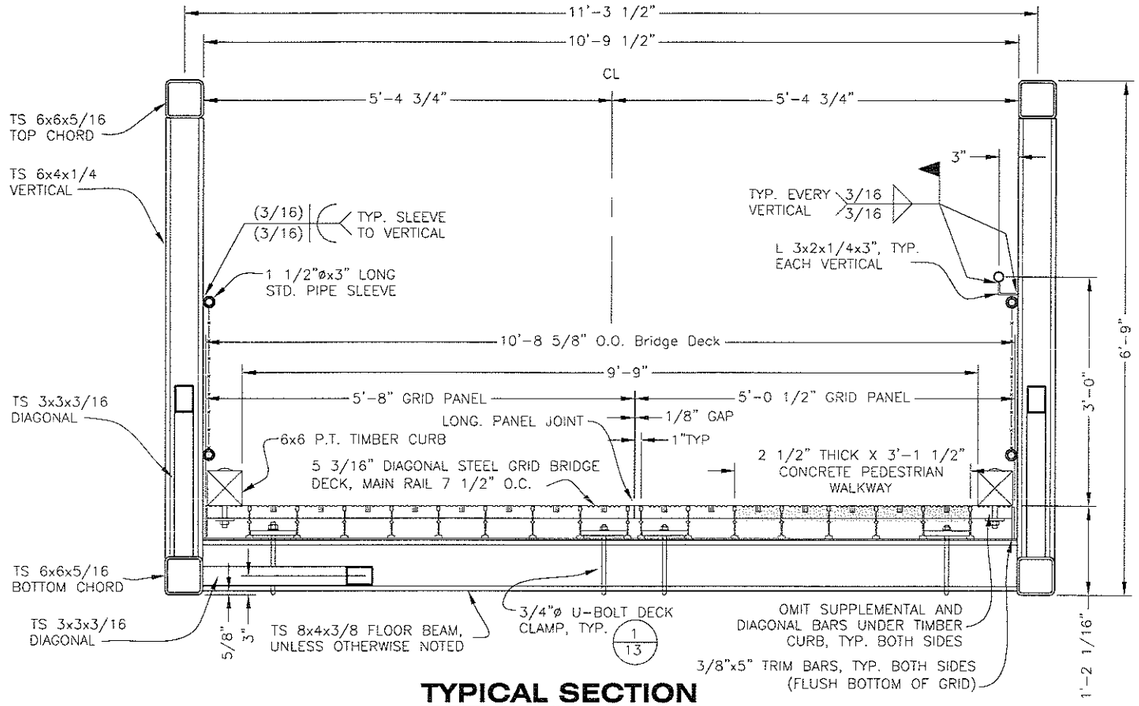

TYPICAL SECTION (LOOKING SHORWARD)

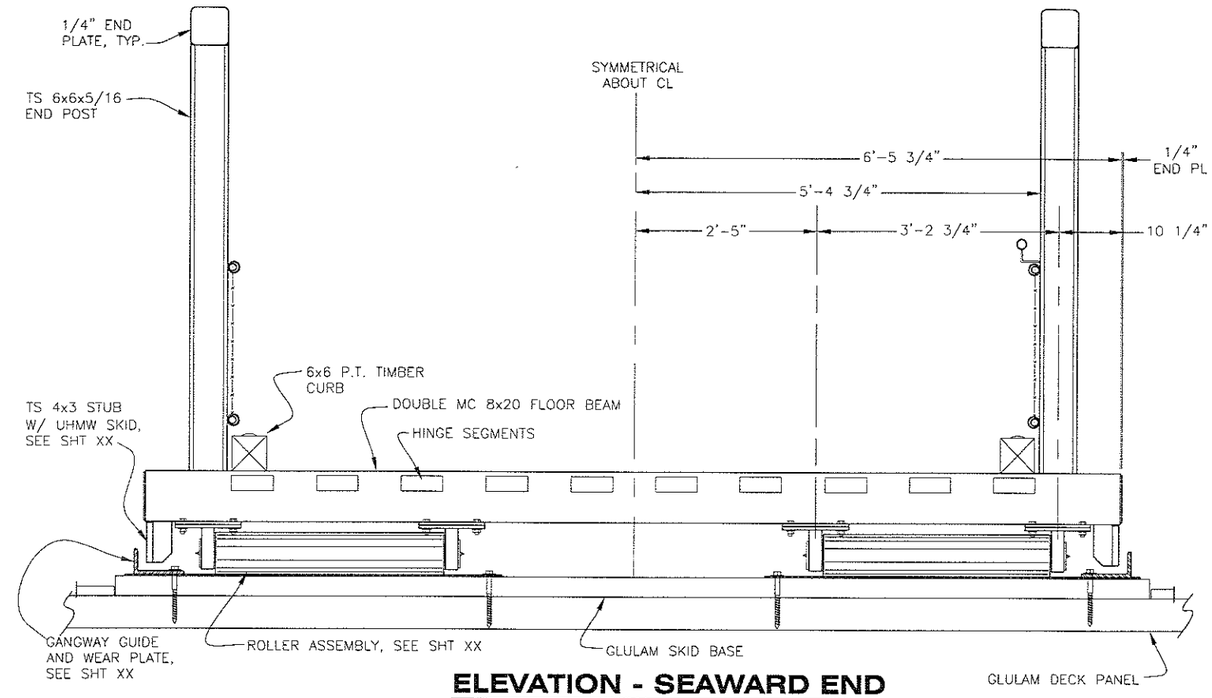

ELEVATION - SEAWARD END

NOTE: APRON & TRANSITION PL NOT SHOWN

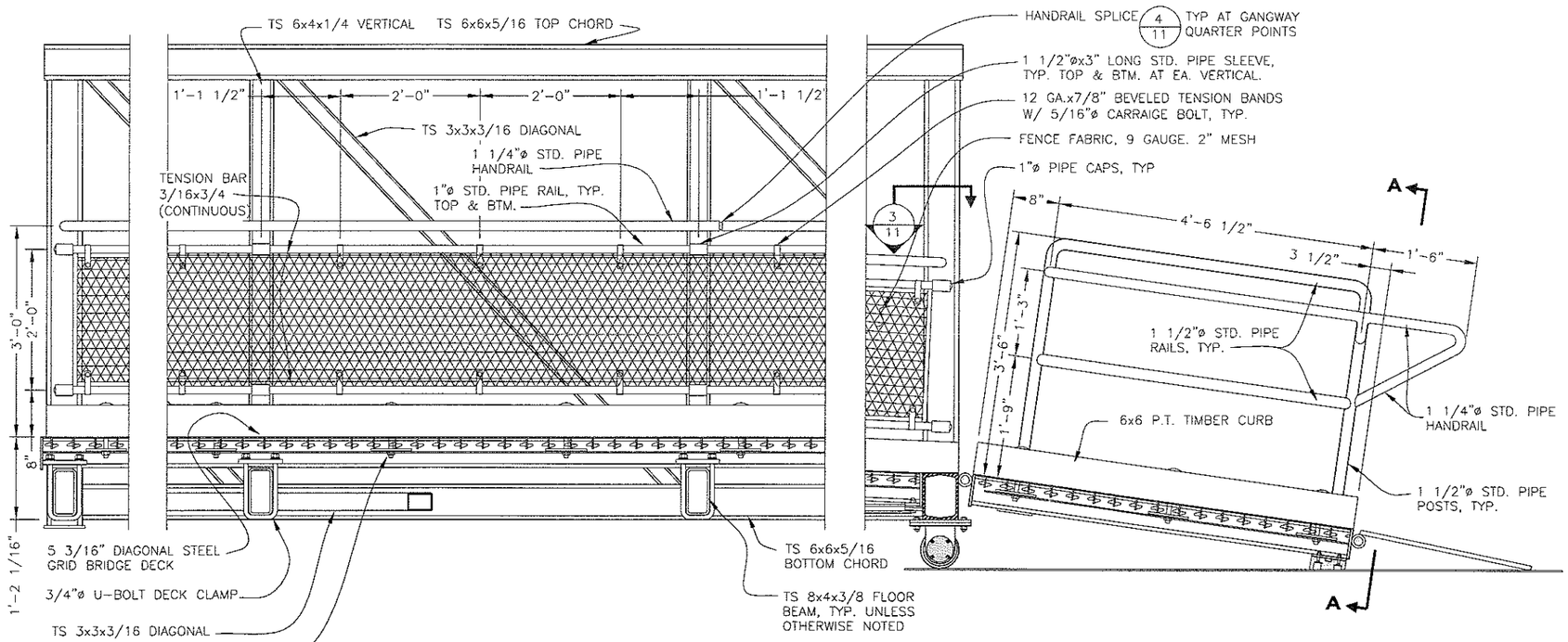

TYPICAL INTERIOR ELEVATION

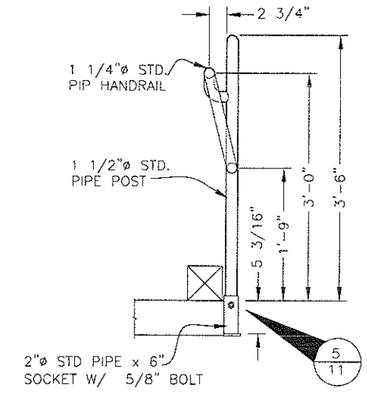

SECTION A-A

DO NOT SCALE FROM THESE DRAWINGS USE DIMENSIONS

CHECKED BY:

DESIGNED BY:

DRAWN BY:

STATE OF ALASKA
DEPARTMENT OF TRANSPORTATION & PUBLIC FACILITIES
SOUTHEAST REGION

NAUKATI HARBOR IMPROVEMENTS PROJECT #69647

GANGWAY TYPICAL SECTIONS & ELEVATIONS

PATH: Q:\POW\69647\MF\PLANSET\10-GANGWAY TYP SECTIONS.DWG
TAB: 10 Wednesday, June 29, 2011 2:02:22 PM FUNK, JOSEPH R (DOT)

REVISIONS			PROJECT DESIGNATION	YEAR	SHEET NO.	TOTAL SHEETS
NO.	DATE	DESCRIPTION	69647	2011	10	29

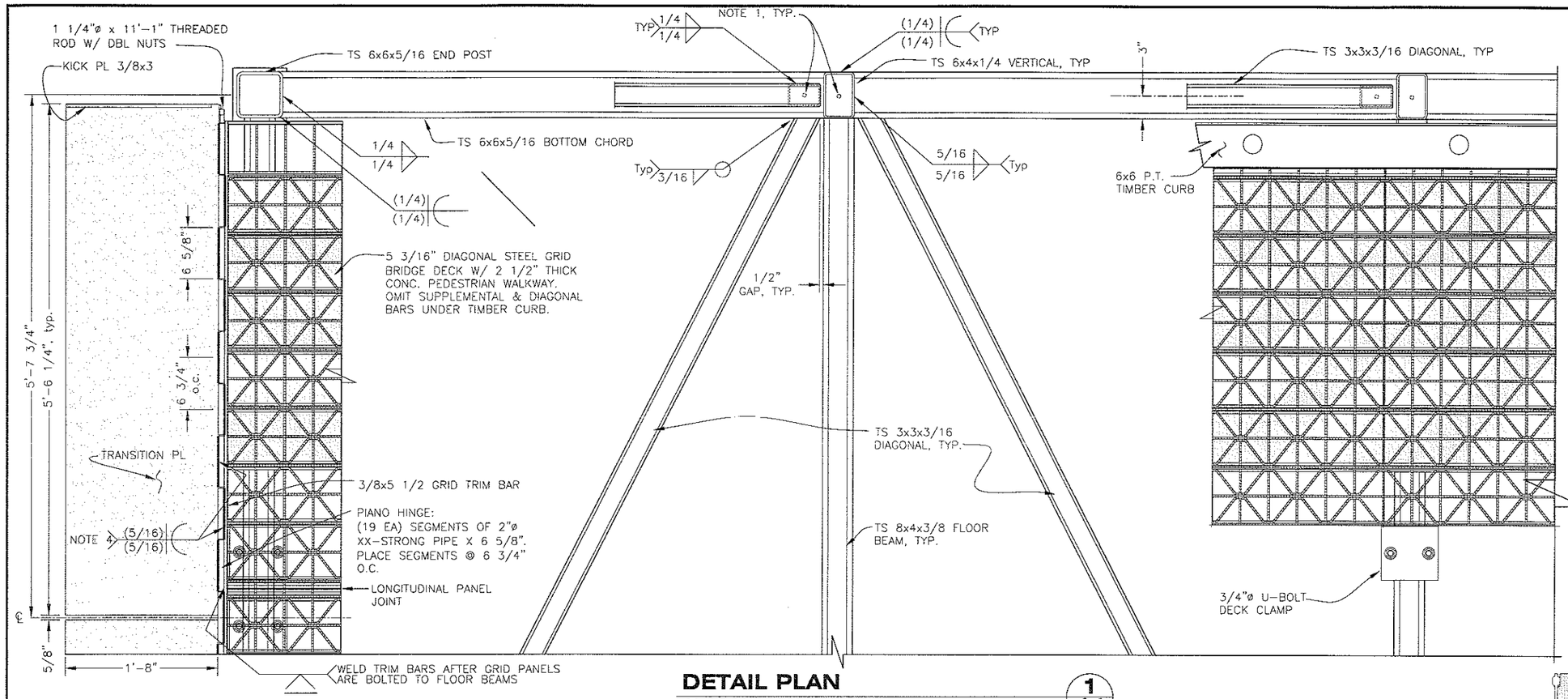

DETAIL PLAN
GANGWAY SHOREWARD END (1/11)

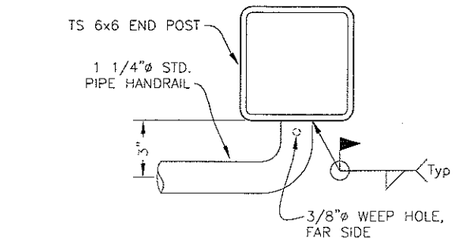

HANDRAIL DETAIL (3/11)

TYP. AT BOTH ENDS OF GANGWAY

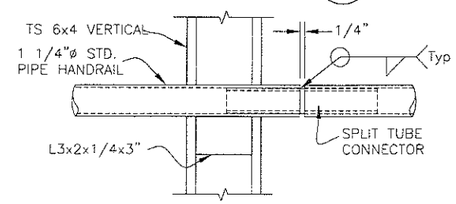

SPLICE DETAIL (4/11)

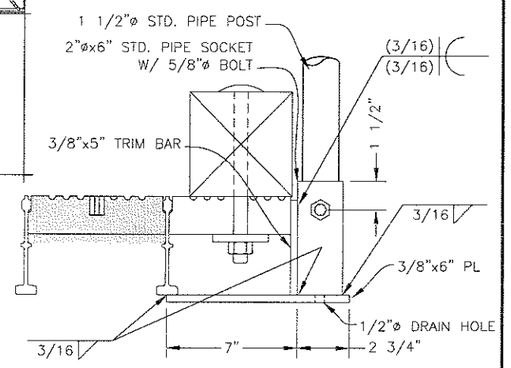

SOCKET DETAIL (5/11)

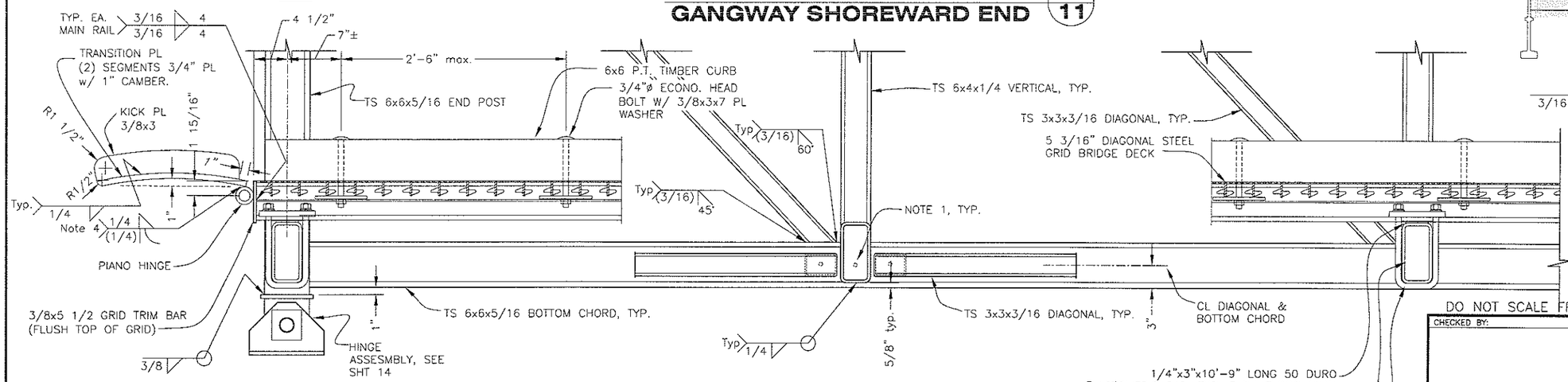

SECTION
GANGWAY SHOREWARD END (2/11)

GENERAL NOTES:

1. PROVIDE 3/8"ø WEEP HOLES IN THE CHORDS AT ALL JOINTS WHERE THE DIAGONALS, VERTICALS, & FLOOR BEAMS OVERLAP.
2. JOINTS AND SPLICES IN THE DIAGONAL STEEL GRID DECKING SHALL BE DETAILED BY THE DECK FABRICATOR.
3. WEAR SURFACES OF TRANSITION PLATES SHALL BE COATED WITH A NON-SLIP, SPRAY METALLIZED ABRASIVE PRIOR TO GALVANIZING.
4. WELD ALTERNATE HINGE SEGMENTS TO TRANSITION PL AND GRID TRIM BAR.
5. WELD ALTERNATE HINGE SEGMENTS TO FLOOR BEAM AND GRID TRIM BAR.

DO NOT SCALE FROM THESE DRAWINGS USE DIMENSIONS

CHECKED BY:

DESIGNED BY:

DRAWN BY:

STATE OF ALASKA
DEPARTMENT OF TRANSPORTATION & PUBLIC FACILITIES
SOUTHEAST REGION

NAUKATI HARBOR IMPROVEMENTS PROJECT #69647

GANGWAY SHOREWARD END DETAILS

PATH: Q:\POW\69647\WF\PLANSET\11-GANGWAY SHOREWARD DETAILS.DWG
TAB: 11 Wednesday, June 29, 2011 2:05:01 PM FUNK, JOSEPH R (DOT)

REVISIONS			PROJECT DESIGNATION	YEAR	SHEET NO.	TOTAL SHEETS
NO.	DATE	DESCRIPTION	69647	2011	11	29

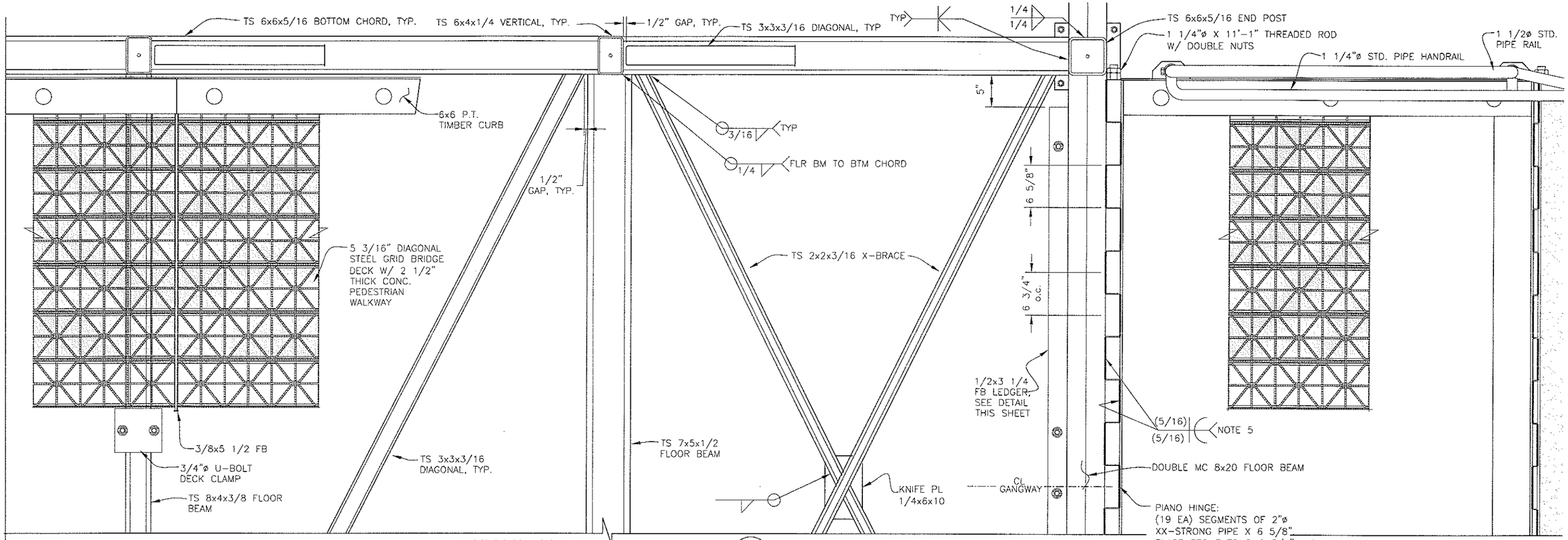

DETAIL PLAN
GANGWAY SEAWARD END (1/12)

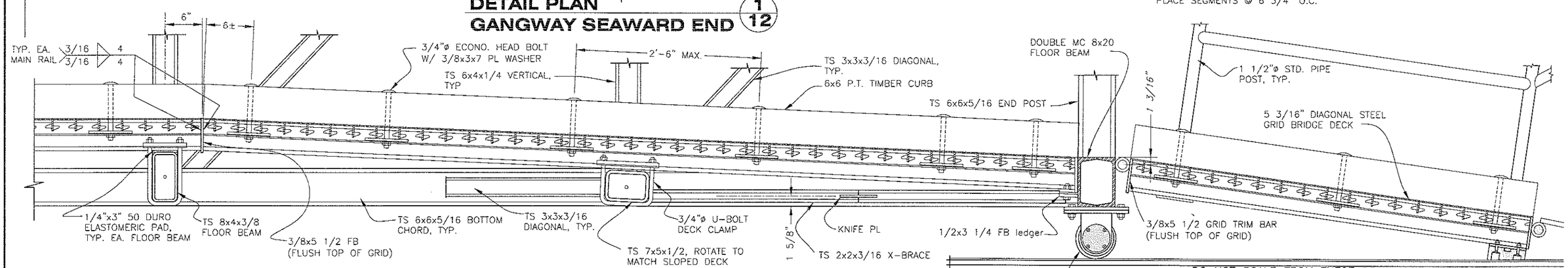

SECTION
GANGWAY SEAWARD END (2/12)

DO NOT SCALE FROM THESE DRAWINGS USE DIMENSIONS

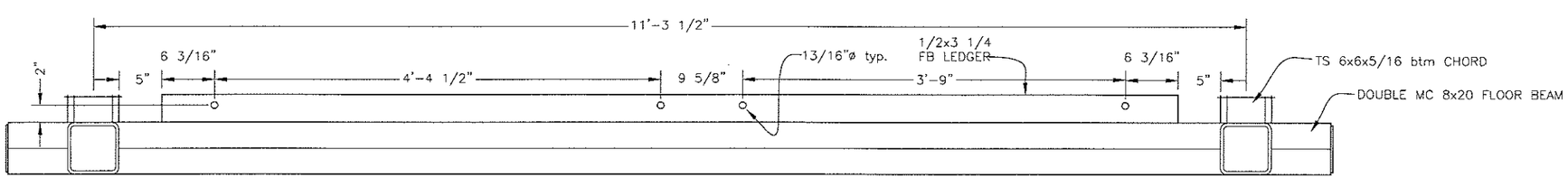

DETAIL PLAN - FB LEDGER

CHECKED BY:	STATE OF ALASKA DEPARTMENT OF TRANSPORTATION & PUBLIC FACILITIES SOUTHEAST REGION
	NAUKATI HARBOR IMPROVEMENTS PROJECT #69647
DESIGNED BY:	**GANGWAY SEAWARD END DETAILS**
DRAWN BY:	

PATH: Q:\POW\69647\MF\PLANSET\12-GANGWAY SEAWARD DETAILS.DWG
TAB: 12 Wednesday, June 29, 2011 2:07:42 PM FUNK, JOSEPH R (DOT)

REVISIONS			PROJECT DESIGNATION	YEAR	SHEET NO.	TOTAL SHEETS
NO.	DATE	DESCRIPTION	69647	2011	12	29

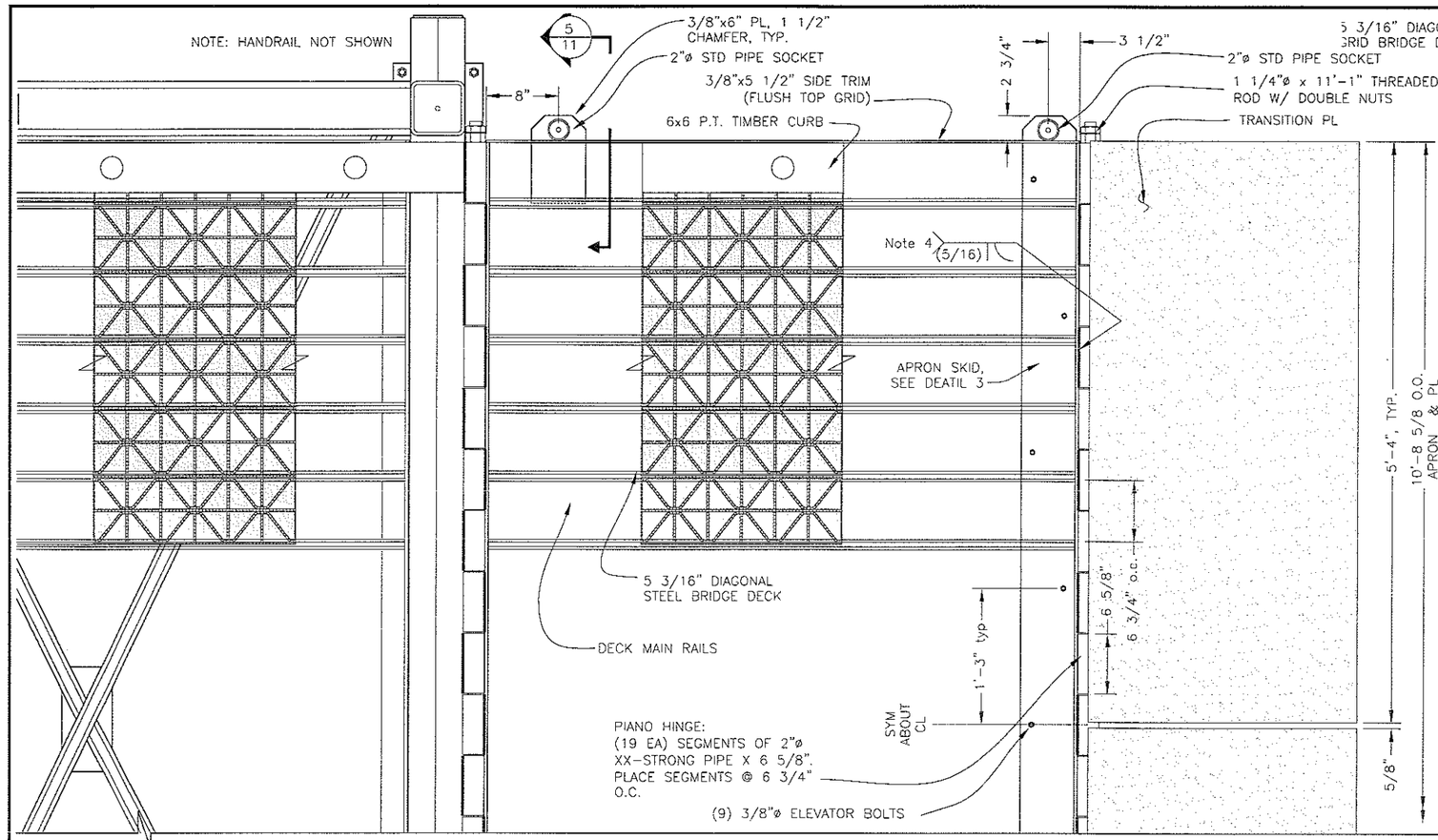

DETAIL PLAN
GANGWAY APRON & TRANSITION PLATE (1/13)

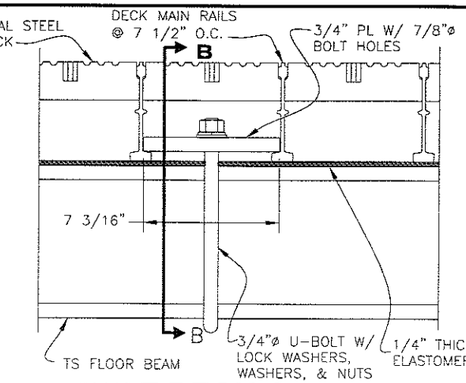

U-BOLT DECK CLAMP DETAIL (1/13)

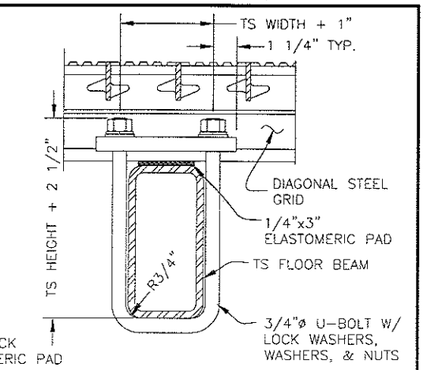

SECTION B-B

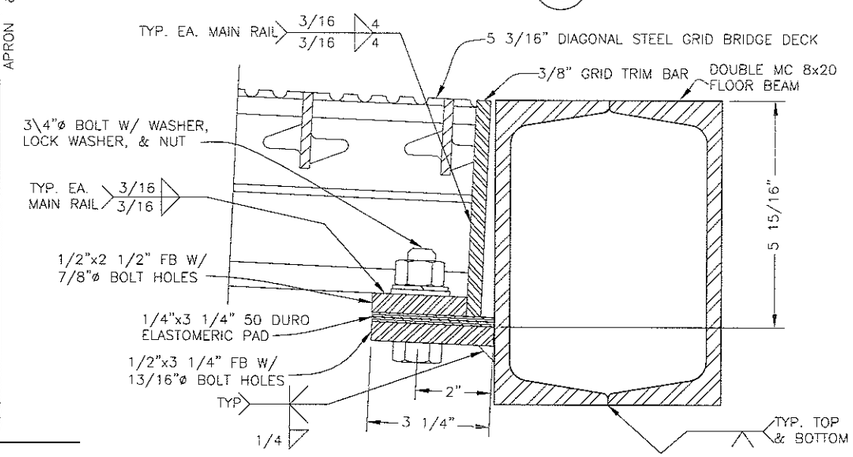

SEAWORD END FLOOR BEAM DETAIL 2

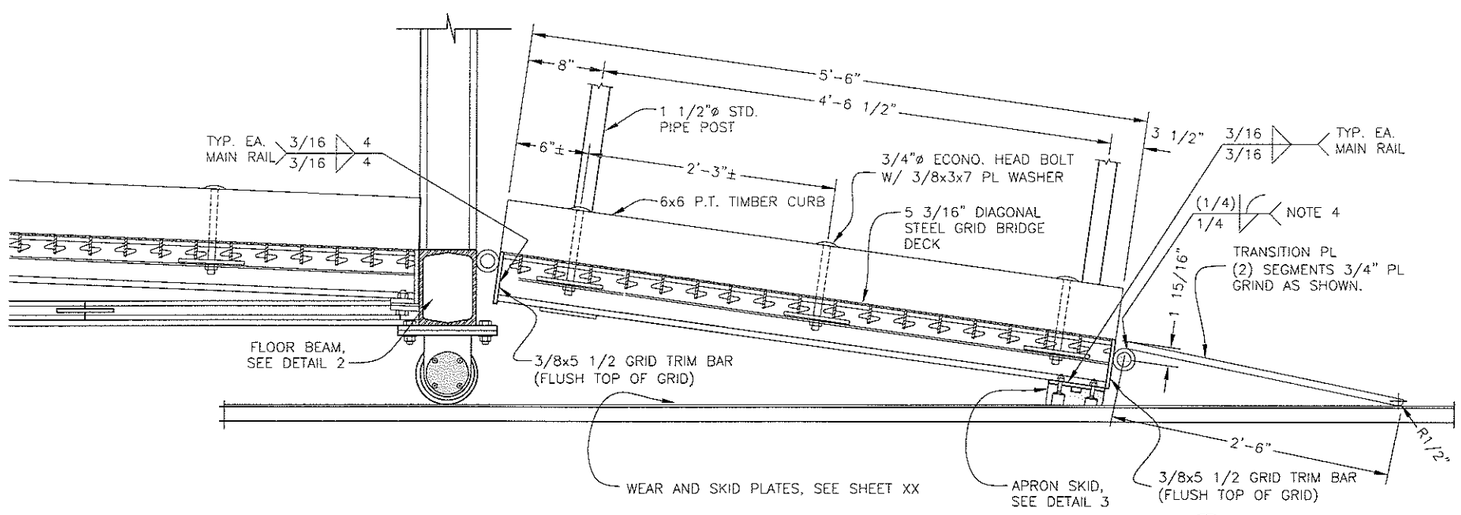

SECTION
GANGWAY APRON & TRANSITION PLATE (2/13)

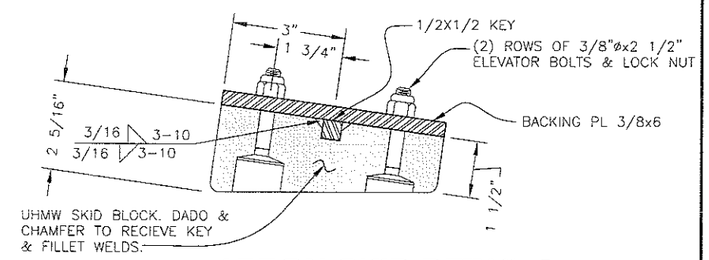

APRON SKID DETAIL 3

DO NOT SCALE FROM THESE DRAWINGS USE DIMENSIONS

CHECKED BY:

DESIGNED BY:

DRAWN BY:

STATE OF ALASKA
DEPARTMENT OF TRANSPORTATION & PUBLIC FACILITIES
SOUTHEAST REGION

NAUKATI HARBOR IMPROVEMENTS PROJECT #69647

GANGWAY SEAWARD APRON & TRANSITION PLATE

PATH: Q:\POW\69647\MF\PLANSET\13-GANGWAY SEAWARD TP.DWG
TAB: 13 Wednesday, June 29, 2011 2:10:17 PM FUNK, JOSEPH R (DOT)

REVISIONS			PROJECT DESIGNATION	YEAR	SHEET NO.	TOTAL SHEETS
NO.	DATE	DESCRIPTION	69647	2011	13	29

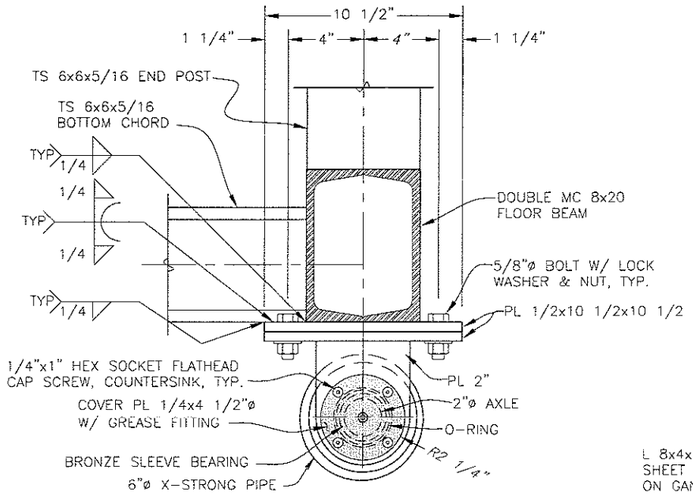

View A-A

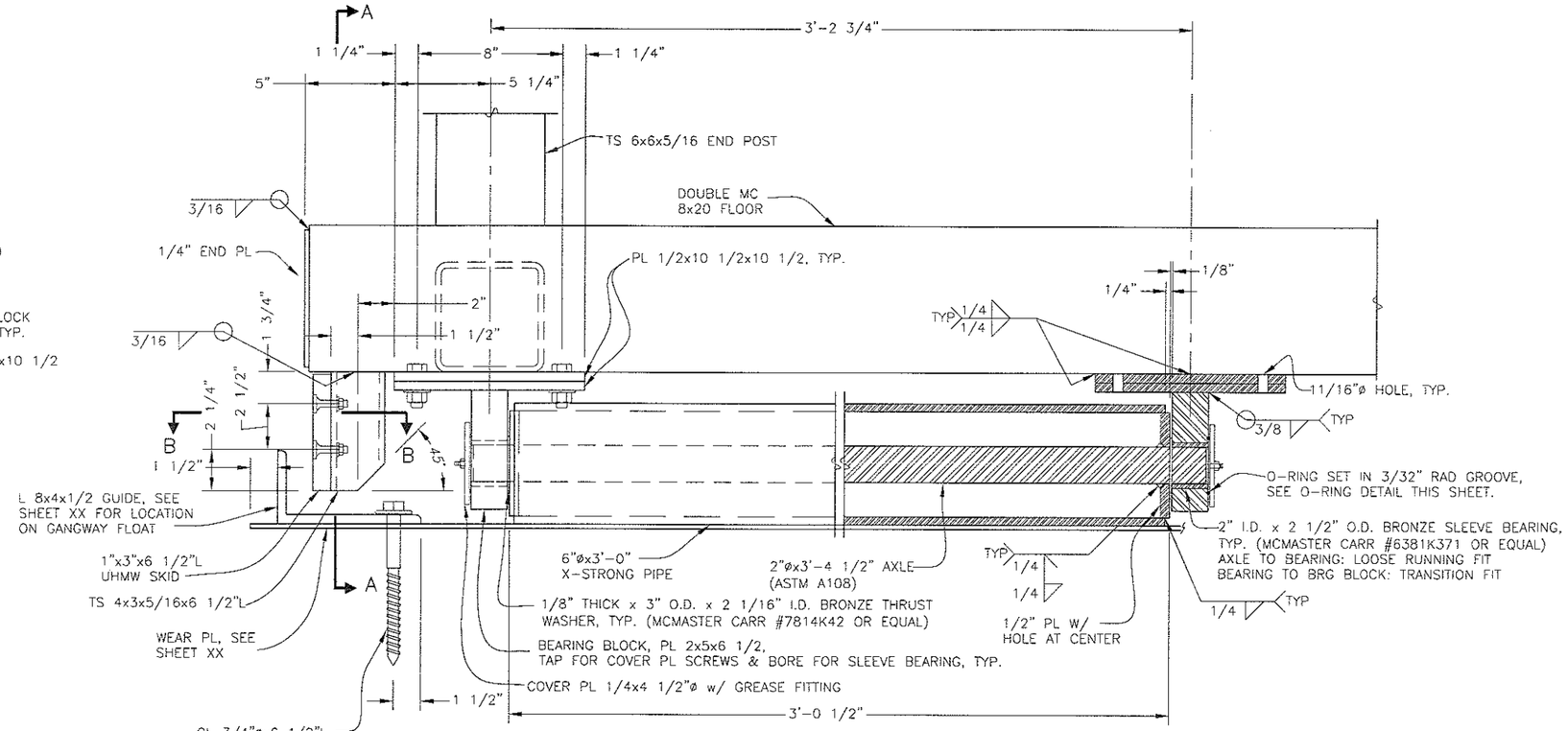

Gangway Roller Front Elevation

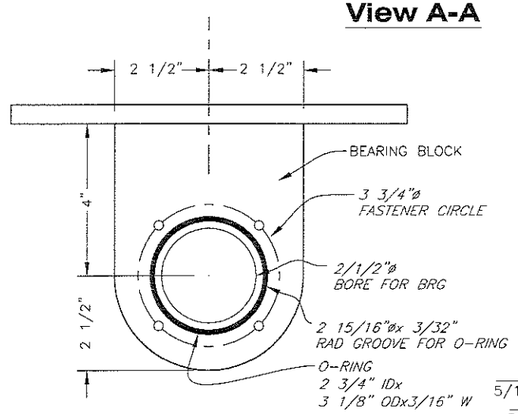

O-Ring Detail

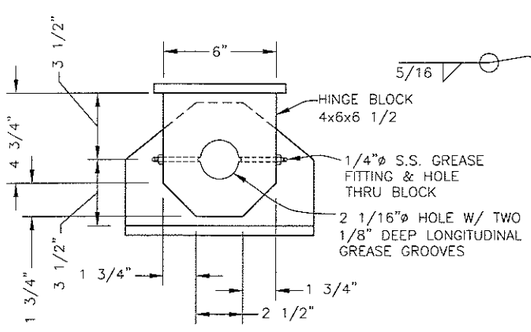

Section C-C

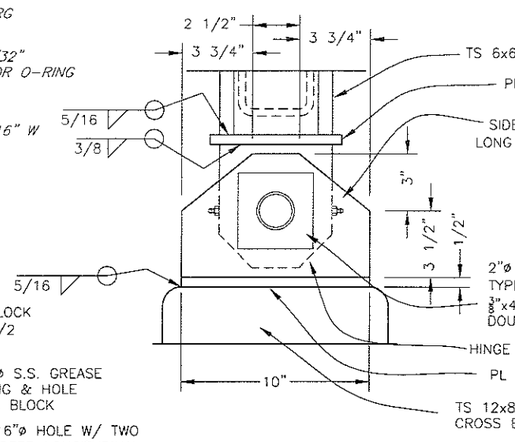

Hinge Assembly Side View

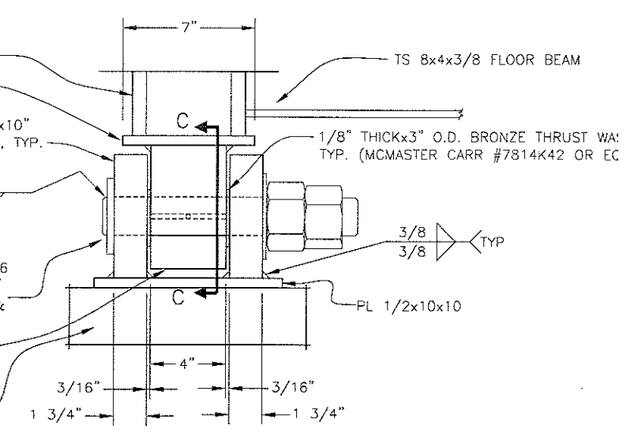

Hinge Assembly Front View

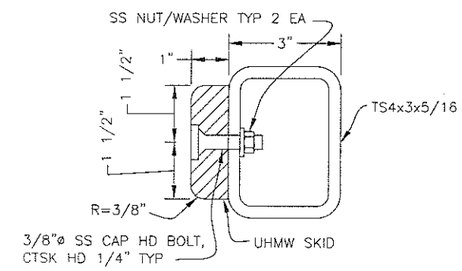

Section B-B

DO NOT SCALE FROM THESE DRAWINGS USE DIMENSIONS

CHECKED BY:

DESIGNED BY:

DRAWN BY:

STATE OF ALASKA
DEPARTMENT OF TRANSPORTATION & PUBLIC FACILITIES
SOUTHEAST REGION

NAUKATI HARBOR IMPROVEMENTS PROJECT #69647

GANGWAY SHOREWARD HINGE & SEAWARD ROLLER DETAILS

PATH: G:\POW\69647\MF\PLANSET\14-GANGWAY ROLLER.DWG
TAB: 14 Wednesday, June 29, 2011 2:11:42 PM FUNK, JOSEPH R (DOT)

REVISIONS			PROJECT DESIGNATION	YEAR	SHEET NO.	TOTAL SHEETS
NO.	DATE	DESCRIPTION	69647	2011	14	29

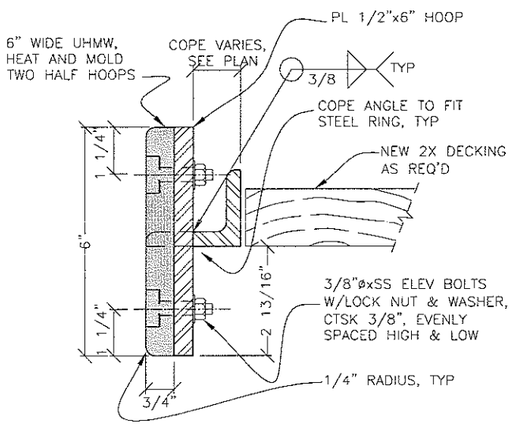

A SECTION
TYPICAL PILE COLLAR

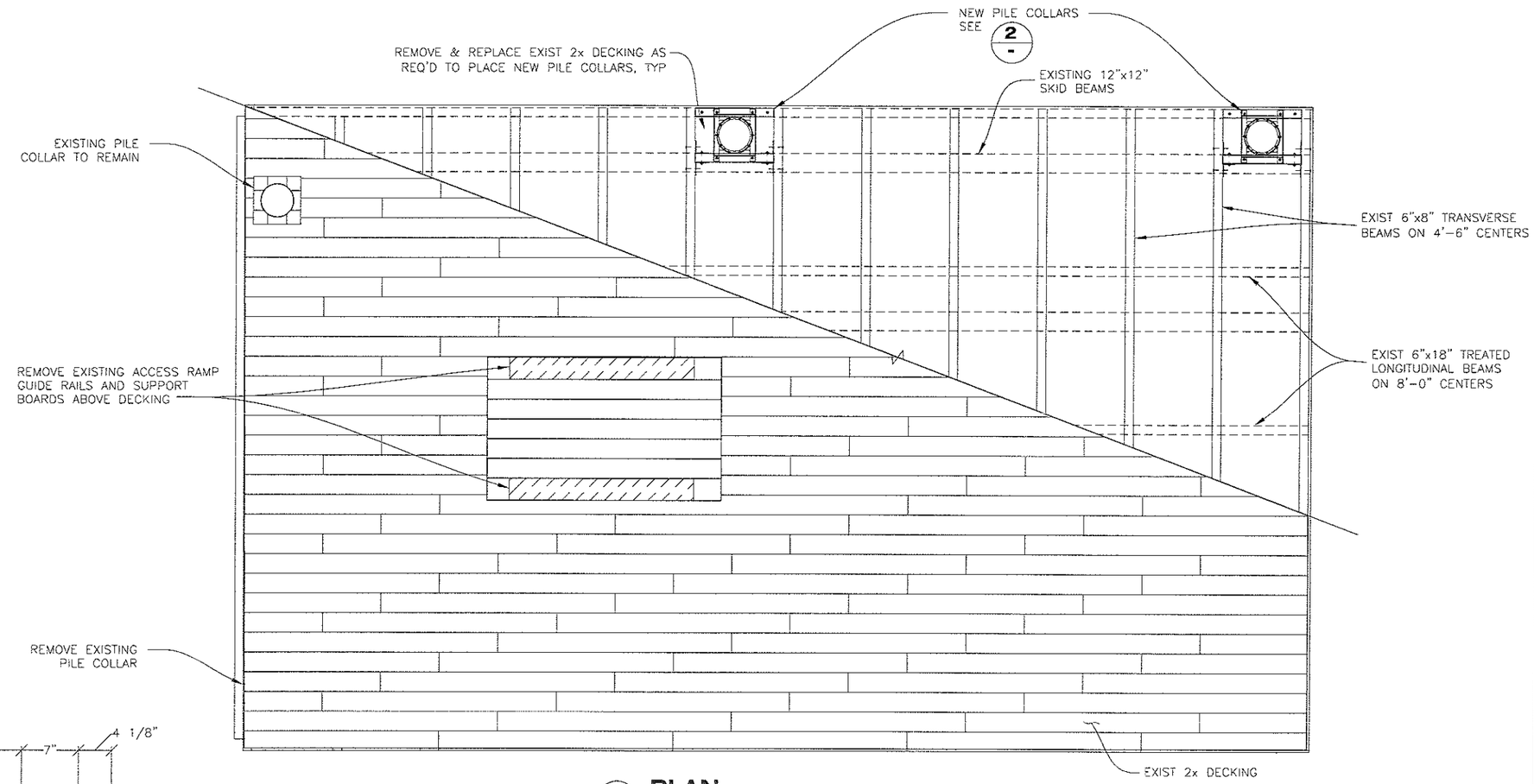

1 PLAN

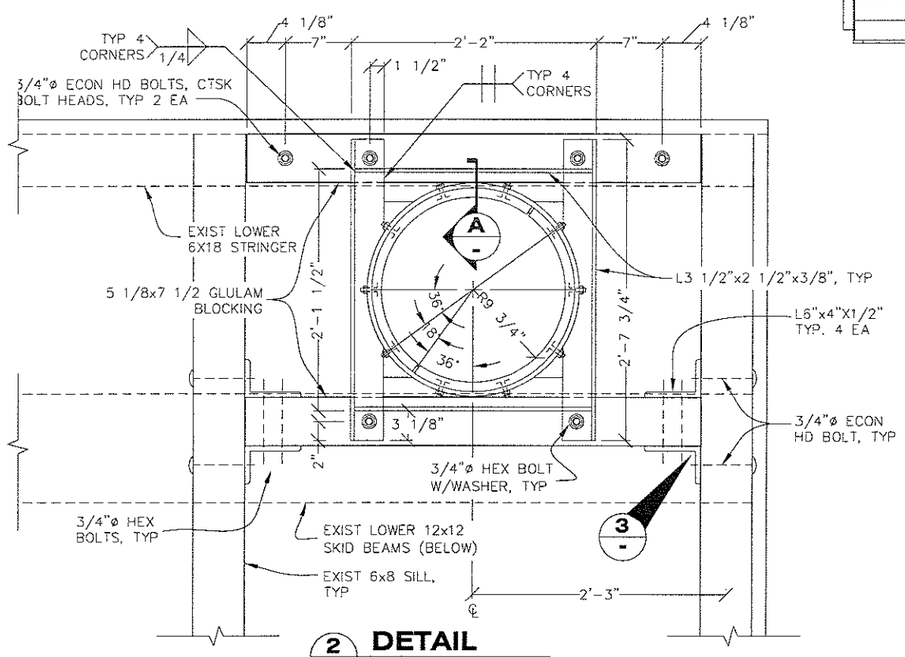

2 DETAIL
NEW PILE COLLAR

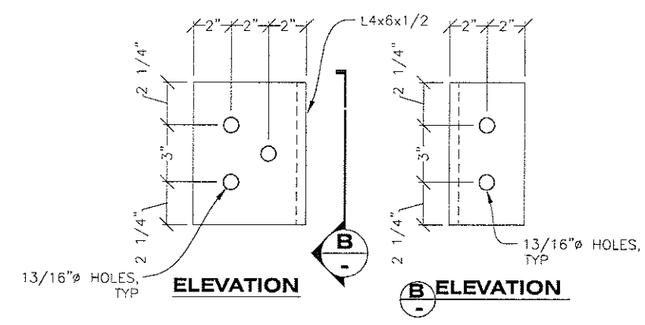

3 DETAIL
ANGLE BRACE

DO NOT SCALE FROM THESE DRAWINGS USE DIMENSIONS

CHECKED BY:

DESIGNED BY:

DRAWN BY:

STATE OF ALASKA
DEPARTMENT OF TRANSPORTATION
& PUBLIC FACILITIES
SOUTHEAST REGION

NAUKATI HARBOR IMPROVEMENTS PROJECT #69647

REFURBISHED SEAPLANE FLOAT

PATH: Q:\POW\69647\MF\PLANSET\15 - 33'X55' EXISTING TIMBER FLOAT.DWG
TAB: 15 Friday, July 01, 2011 3:46:01 PM FUNK, JOSEPH R (DOT)

REVISIONS			PROJECT DESIGNATION	YEAR	SHEET NO.	TOTAL SHEETS
NO.	DATE	DESCRIPTION	69647	2011	15	29

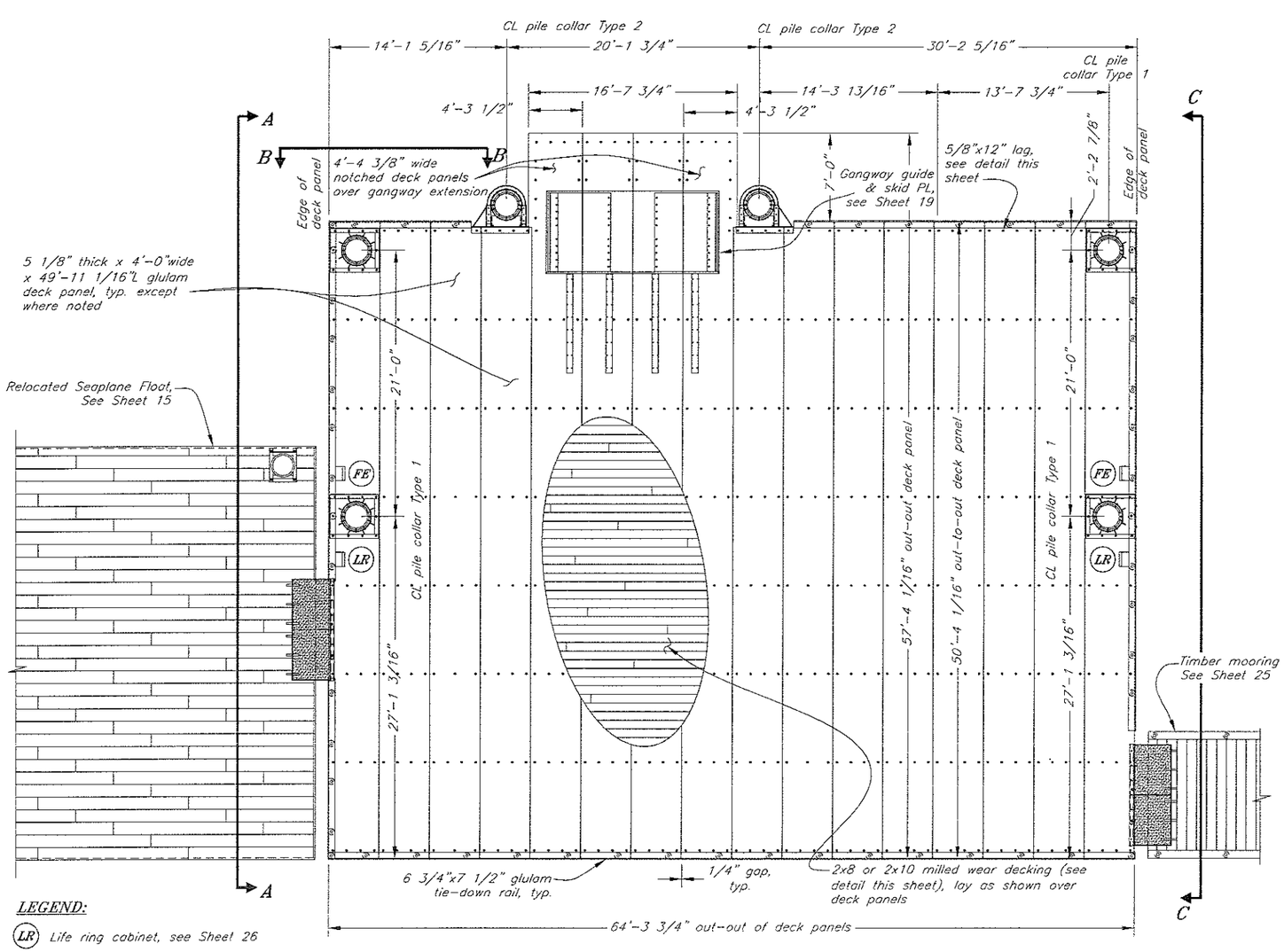

LEGEND:

(LR) Life ring cabinet, see Sheet 26

(FE) Fire extinguisher cabinet, see Sheet 26

Gangway Float Deck Plan

1. Design Freeboard = 22.5"
2. Approximate weight of float is 157,000 lbs. including pile collars & all hardware.

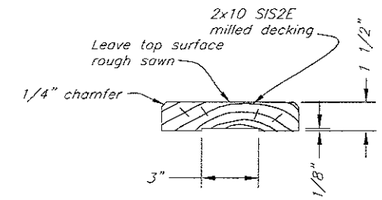

Milled Decking

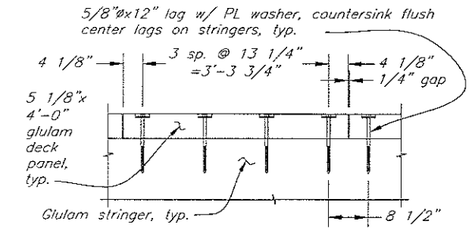

Typical Deck Fastening

(except where noted)

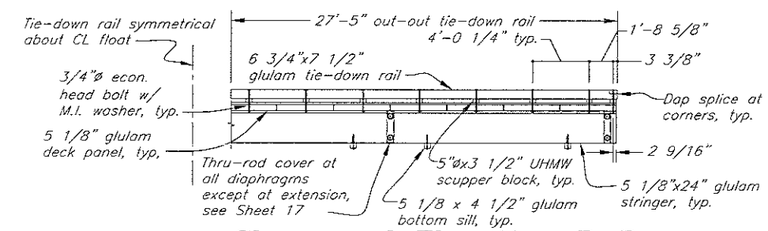

Shoreward Elevation B-B

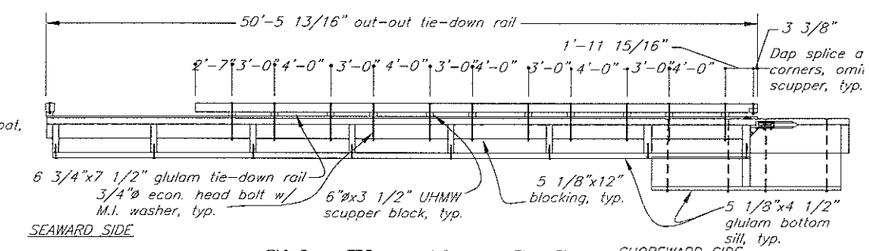

Side Elevation C-C

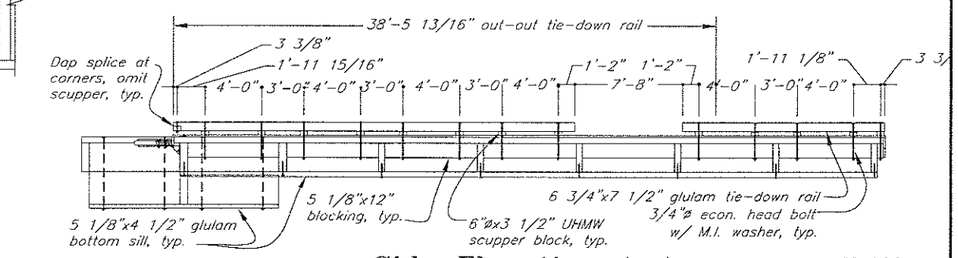

Side Elevation A-A

Seaplane Float Not Shown

Note: Side pile collars & bumper boards not shown for clarity

DO NOT SCALE FROM THESE DRAWINGS USE DIMENSIONS

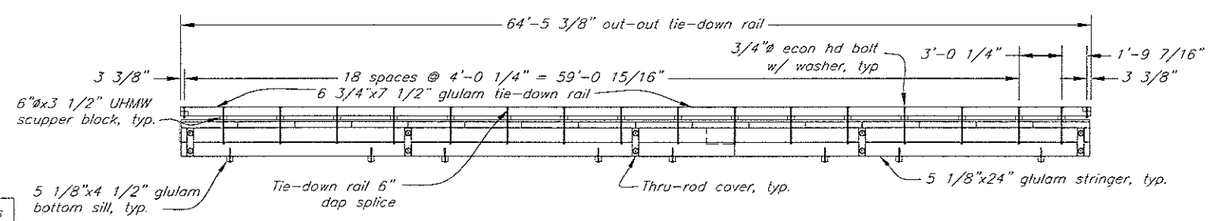

Note: Bumper boards not shown for clarity

Seaward Elevation

CHECKED BY:

STATE OF ALASKA 49th Kirk D. Miller CE-8550 REGISTERED PROFESSIONAL ENGINEER

DESIGNED BY:

DRAWN BY:

STATE OF ALASKA
DEPARTMENT OF TRANSPORTATION & PUBLIC FACILITIES
SOUTHEAST REGION

NAUKATI HARBOR IMPROVEMENTS PROJECT #69647

GANGWAY FLOAT DECK PLAN & ELEVATIONS

PATH: O:\POW\69647\MF\PLANSET\16- GW FLOAT DECK.DWG
TAB: 16 Wednesday, July 06, 2011 11:30:33 AMFUNK, JOSEPH R (DOT)

REVISIONS			PROJECT DESIGNATION	YEAR	SHEET NO.	TOTAL SHEETS
NO.	DATE	DESCRIPTION	69647	2011	16	29

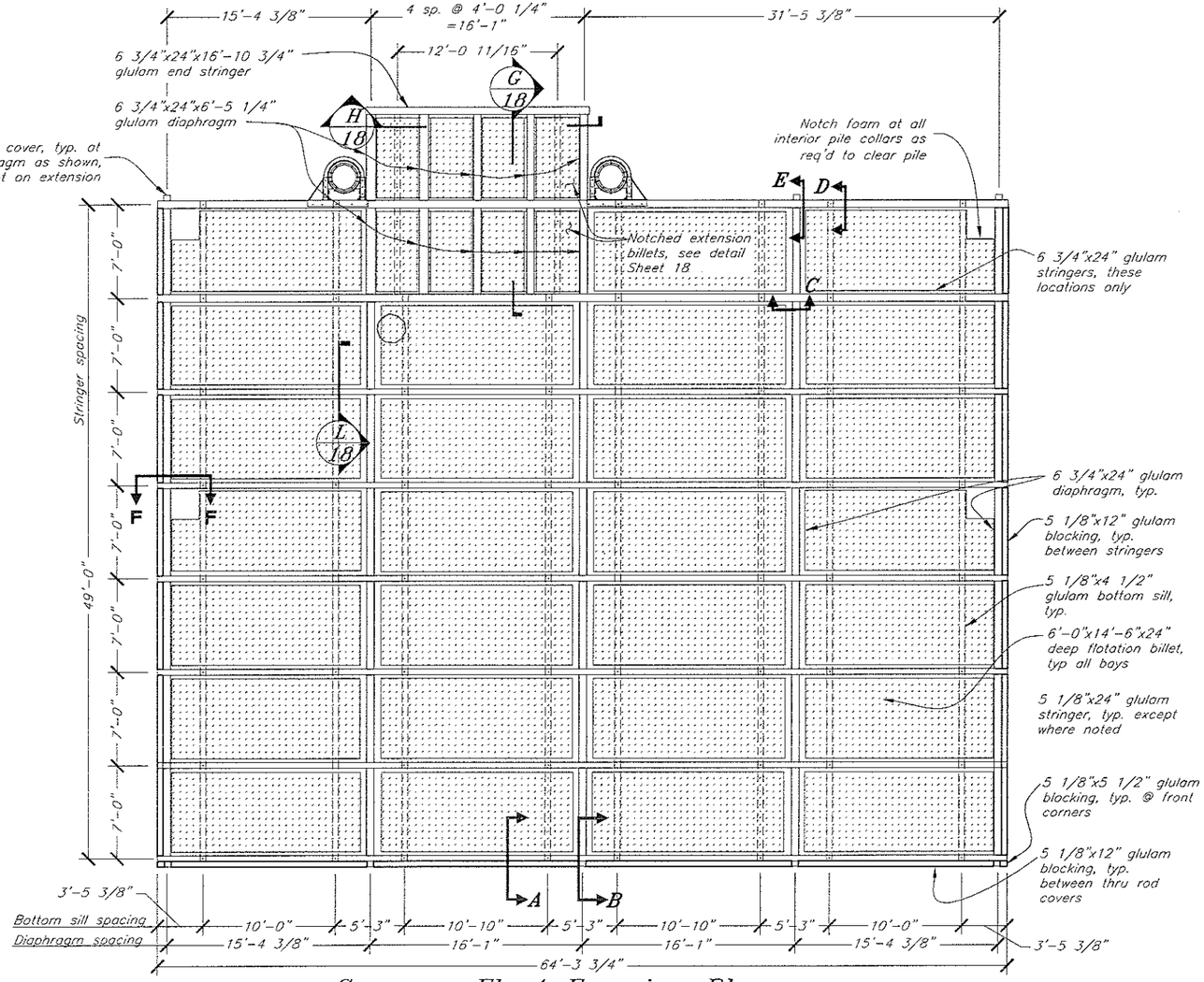

Gangway Float Framing Plan

(Deck and Glulam Subdeck not shown for clarity)

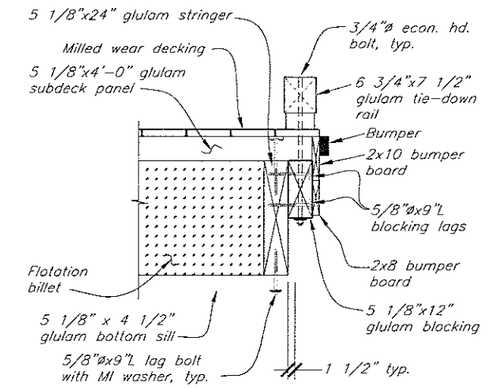

Section A-A

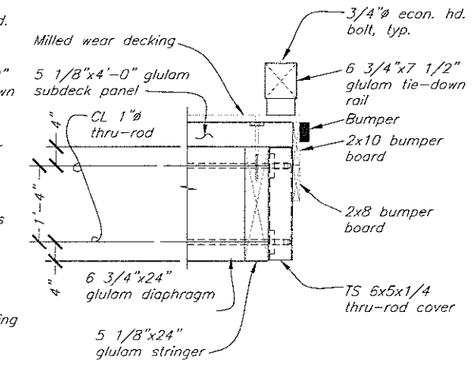

Section B-B

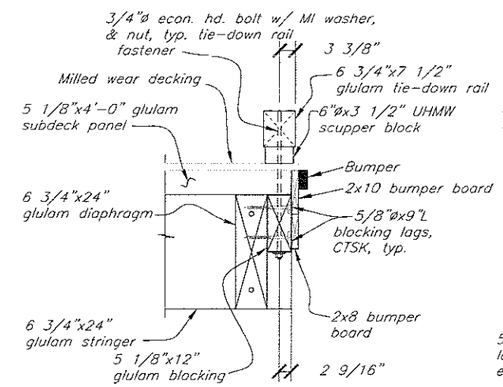

Section C-C

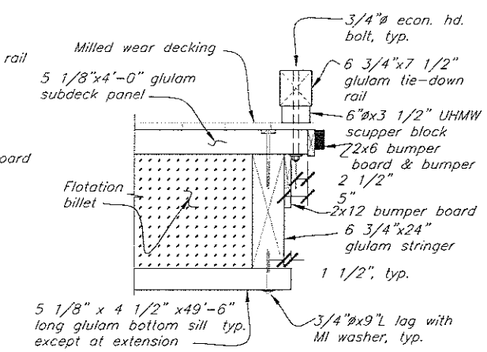

Section D-D

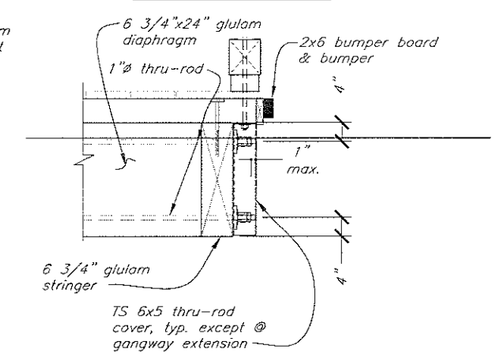

Section E-E

Thru-rod Anchor

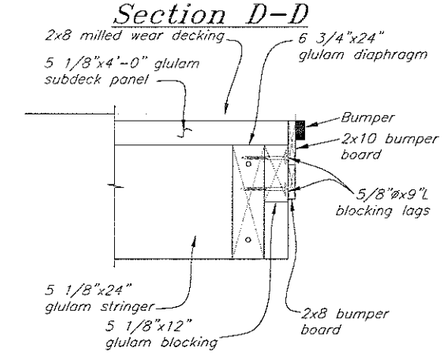

Section F-F

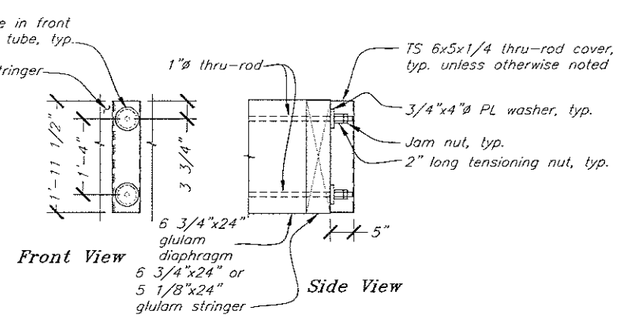

Thru-rod & Cover Detail

Notes:

1. See General Notes Sheet 2 and specifications for material designations and additional connection and hardware requirements not shown.
2. See Sheet 23 for exterior blocking and rail details not shown.
3. Exterior bumper cushion on five sides, approximately 230 LF required.
4. Exterior bumper boards & bumper cushions do not extend across thru-rod covers (provide gap at thru-rod locations).

DO NOT SCALE FROM THESE DRAWINGS USE DIMENSIONS

CHECKED BY:

STATE OF ALASKA 49th Kirk D. Miller CE-8550 REGISTERED PROFESSIONAL ENGINEER

DESIGNED BY:

DRAWN BY:

STATE OF ALASKA
DEPARTMENT OF TRANSPORTATION & PUBLIC FACILITIES
SOUTHEAST REGION

NAUKATI HARBOR IMPROVEMENTS PROJECT #69647

GANGWAY FLOAT FRAMING PLAN & SECTIONS

PATH: G:\POW\69647\MF\PLANSET\17- GW FLOAT FRAMING.DWG
TAB: 17 Wednesday, July 06, 2011 11:48:20 AM FUNK, JOSEPH R (DOT)

REVISIONS			PROJECT DESIGNATION	YEAR	SHEET NO.	TOTAL SHEETS
NO.	DATE	DESCRIPTION	69647	2011	17	29

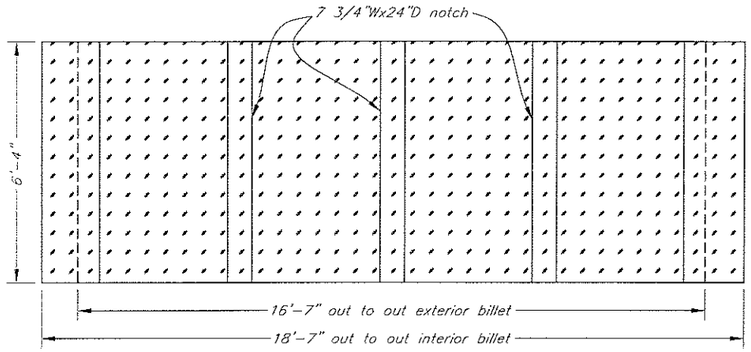

Plan – Notched Extension Flotation Billets

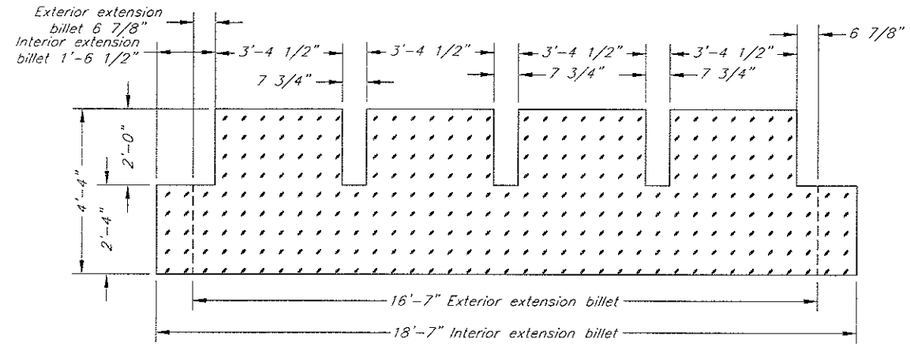

Elevation – Notched Extension Flotation Billets

(2 req'd)

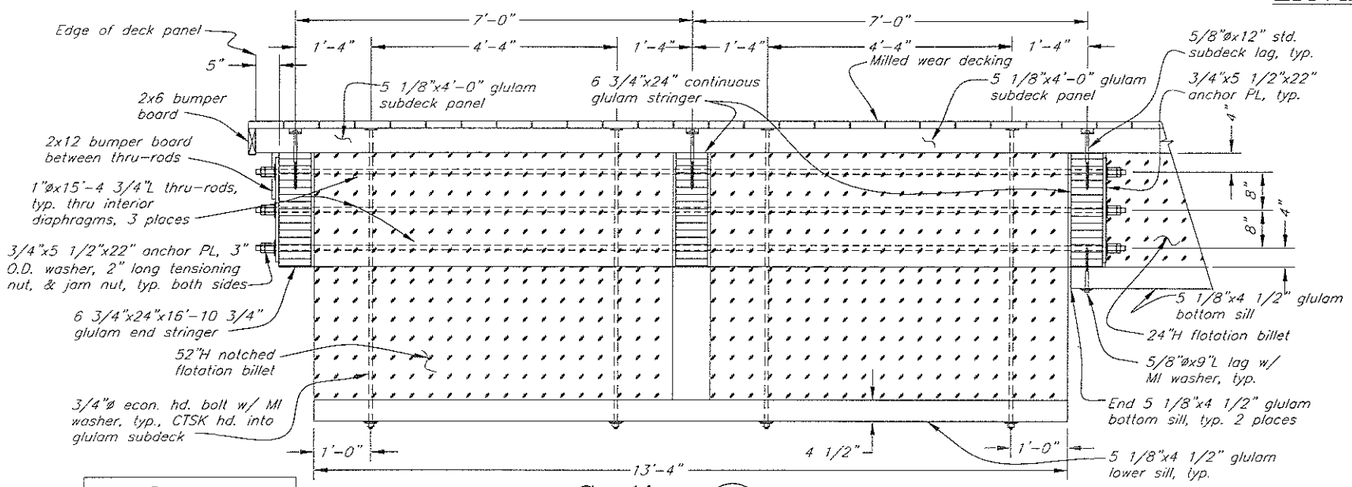

Note: Thru-rod covers not required at extension

Section G/18

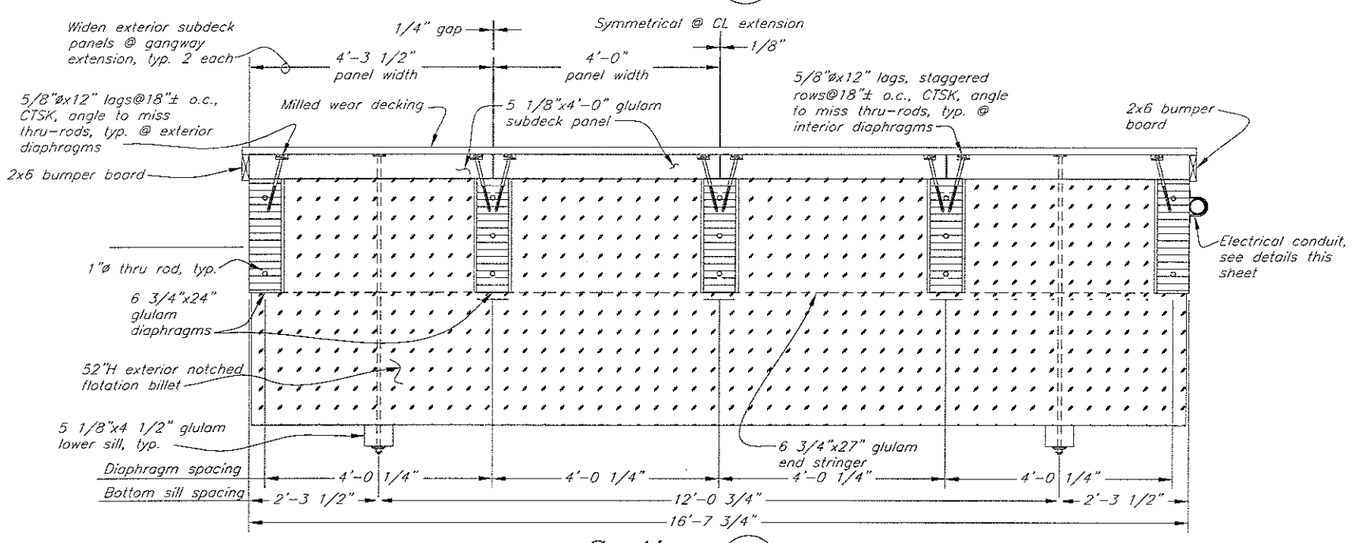

Section H/18

Flotation Billet & Thru-Rod Coupler Notes:

1. Fabricate notched extension billets by fabricating in large of sections as practical and using approved adhesive to combine to the shape shown.

2. Depending on method of float fabrication & assembly, alternative means for obtaining the specified flotation may also be submitted to the Engineer for approval.

3. The maximum length of readily available thru-rods is approximately 50-feet. Construction of the gangway float will require two thru-rods (@ 2 locations) to achieve the specified length and spliced with a coupling nut. This will affect method of float assembly. Suggested thru-rod splice is outlined on Section L. Alternative designs for location and method of splice may be furnished to the Engineer for approval.

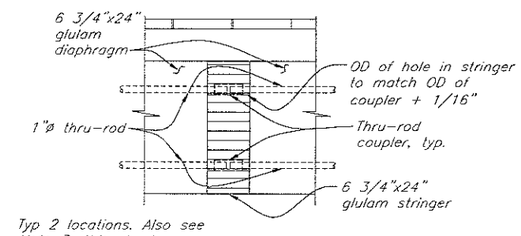

Typ 2 locations. Also see Note 3, this sheet.

Section L/18
Thru-rod Coupler

DO NOT SCALE FROM THESE DRAWINGS USE DIMENSIONS

CHECKED BY:

DESIGNED BY:

DRAWN BY:

STATE OF ALASKA
DEPARTMENT OF TRANSPORTATION
& PUBLIC FACILITIES
SOUTHEAST REGION

NAUKATI HARBOR IMPROVEMENTS PROJECT #69647

GANGWAY FLOAT FLOTATION BILLETS

PATH: Q:\POW\69647\MF\PLANSET\18- GW FLOAT EXT FRAMING.DWG
TAB: 18 Friday, July 01, 2011 4:20:34 PM FUNK, JOSEPH R (DOT)

REVISIONS			PROJECT DESIGNATION	YEAR	SHEET NO.	TOTAL SHEETS
NO.	DATE	DESCRIPTION	69647	2011	18	29

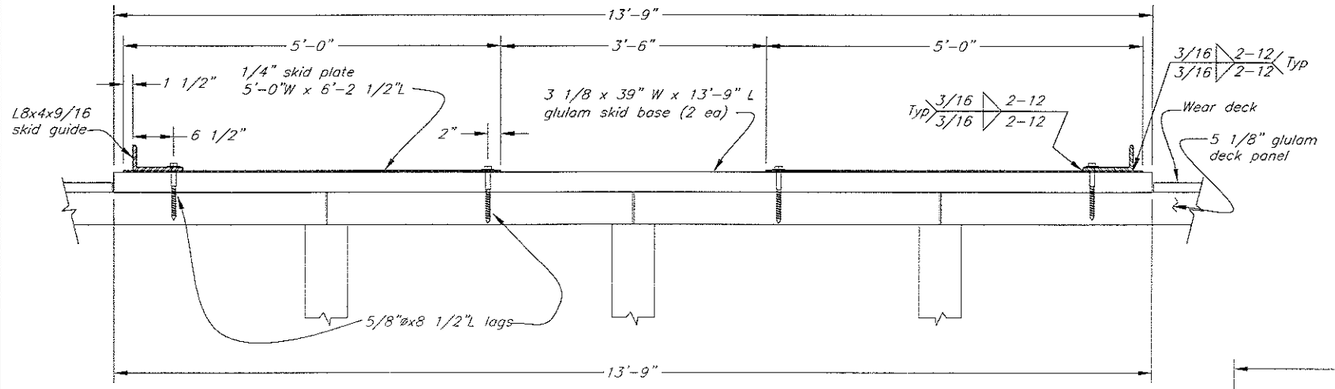

Skid Section A-A

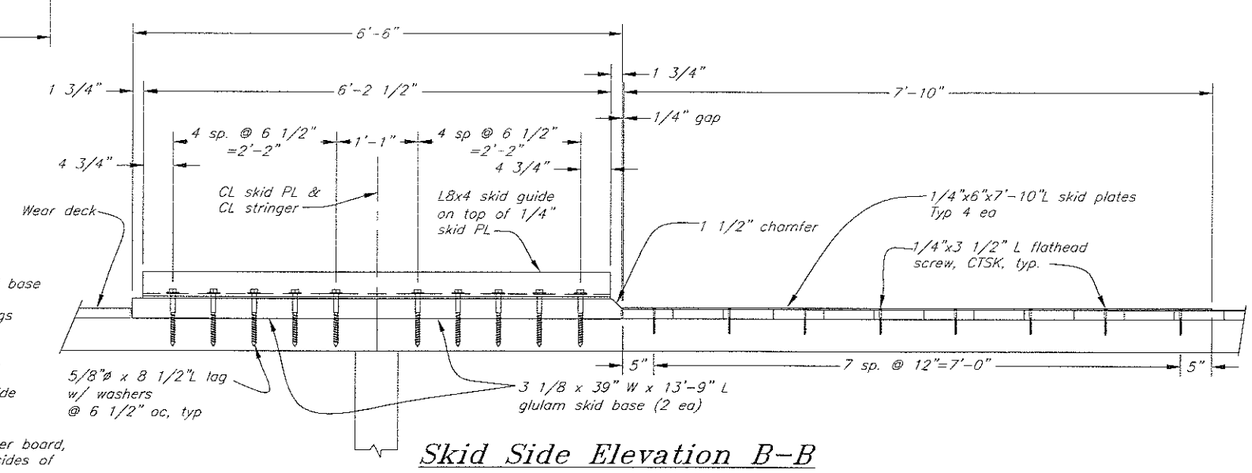

Skid Side Elevation B-B

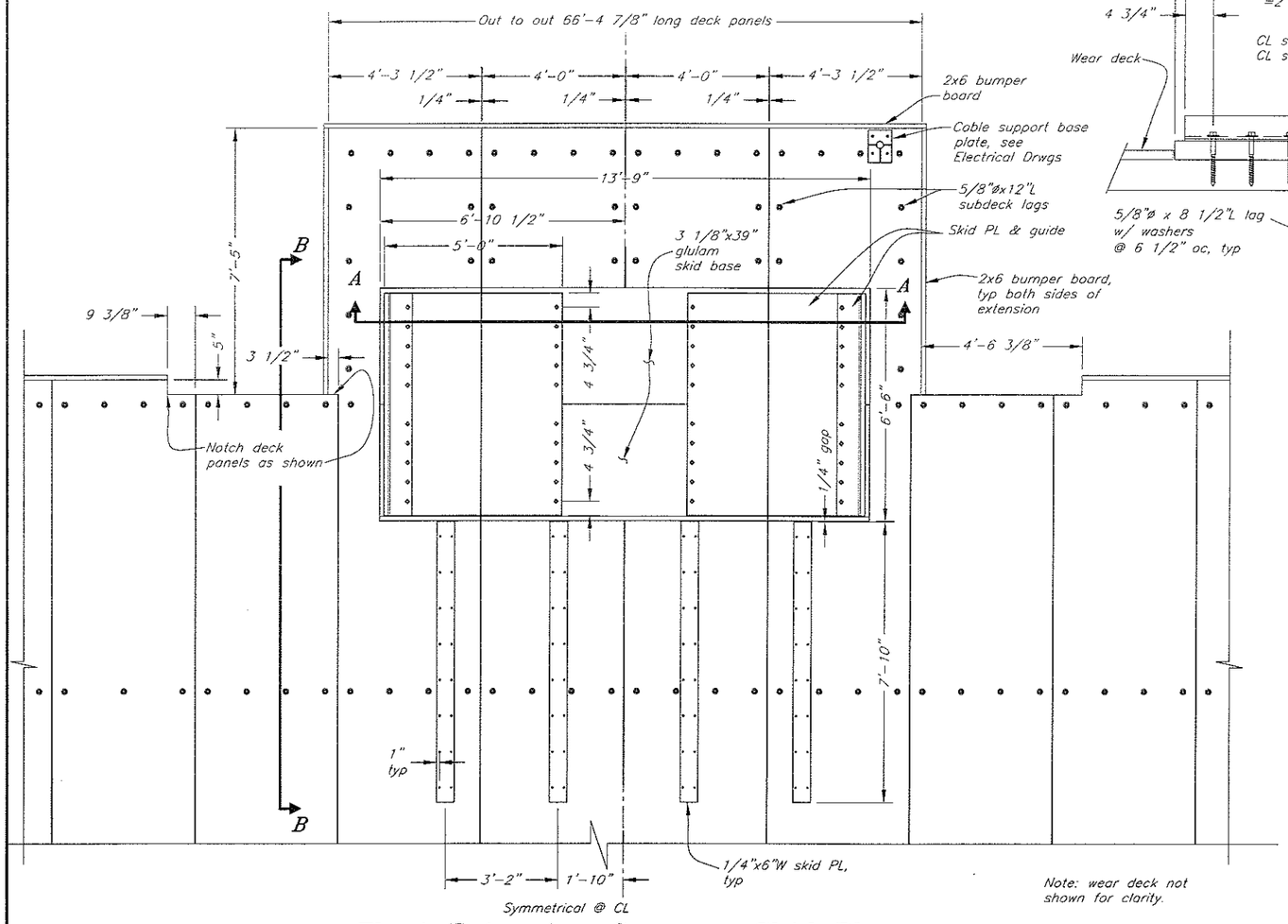

Note: wear deck not shown for clarity.

Float Extension Gangway Skid Plan & Deck Panel Cutouts

Skid Plate Installation Notes:

1. Affix skid plates to float after placement of float & trestle structures & verification of as-built position.
2. Omit wear deck boards in region of skid plates & temporarily place skid plate assemblies at plan location or as otherwise directed by the Engineer based on as-built position of structures.
3. Observe & mark gangway travel for a minimum of 5-days of tidal cycles.
4. Adjust location & alignment of skid plates as required after gangway travel characteristics are known.
5. Install lag bolts as noted on plans and place remaining wear deck boards to match.

DO NOT SCALE FROM THESE DRAWINGS USE DIMENSIONS

CHECKED BY:

DESIGNED BY:

DRAWN BY:

STATE OF ALASKA
DEPARTMENT OF TRANSPORTATION
& PUBLIC FACILITIES
SOUTHEAST REGION

NAUKATI HARBOR IMPROVEMENTS PROJECT #69647

GANGWAY SKID

PATH: G:\POW\69647\WF\PLANSET\19- GW FLOAT SKID PL.DWG
TAB: 19 Wednesday, June 29, 2011 3:59:47 PM FUNK, JOSEPH R (DOT)

REVISIONS			PROJECT DESIGNATION	YEAR	SHEET NO.	TOTAL SHEETS
NO.	DATE	DESCRIPTION	69647	2011	19	29

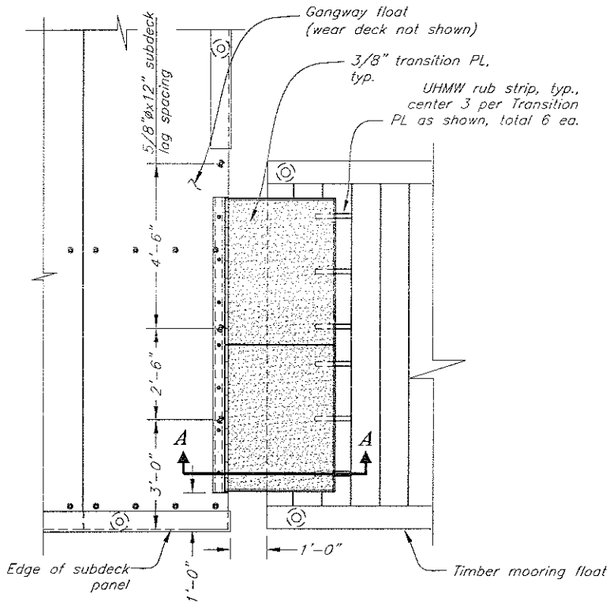

Mooring Float to Gangway Float Transition PL Plan

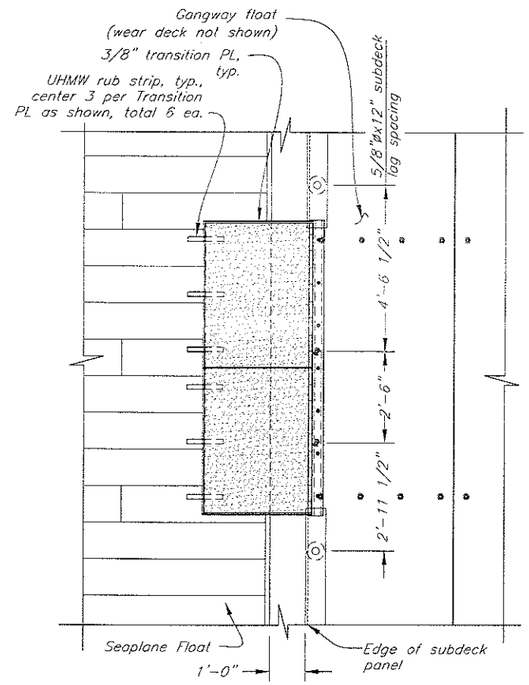

Seaplane Float to Gangway Float Transition PL Plan

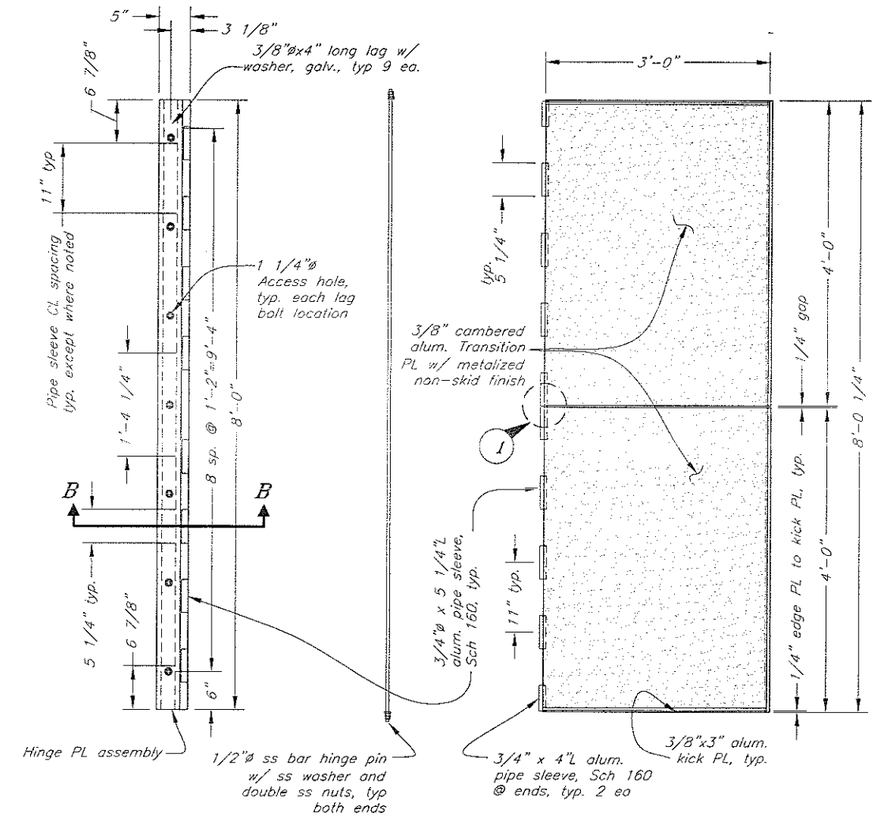

Transition PL Details

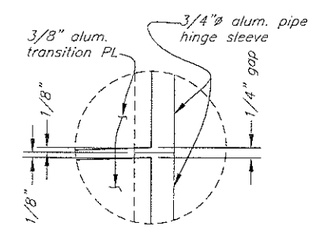

Note: Hinge sleeves extend beyond transition PL's 1/8" to create 1/4" gap between PL's

Detail 1

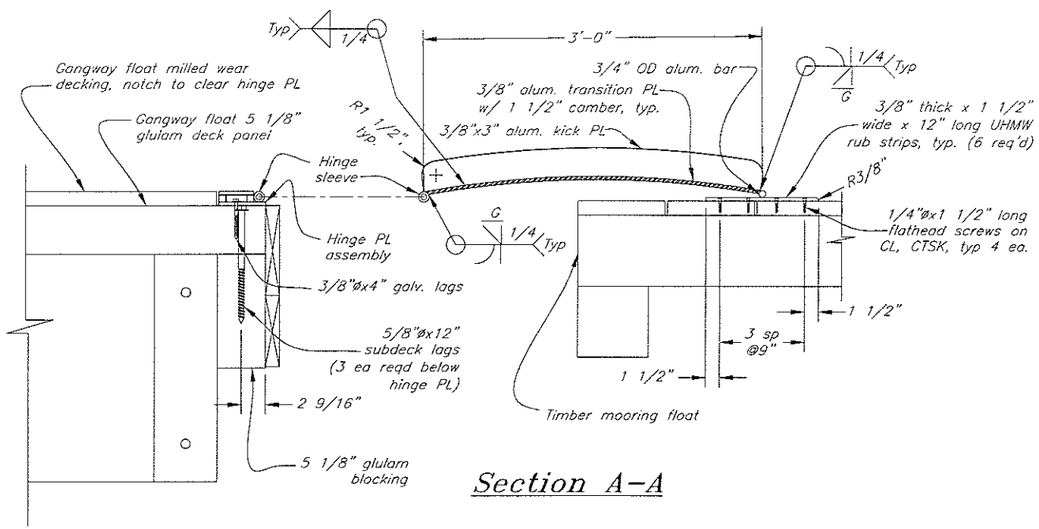

Section A–A

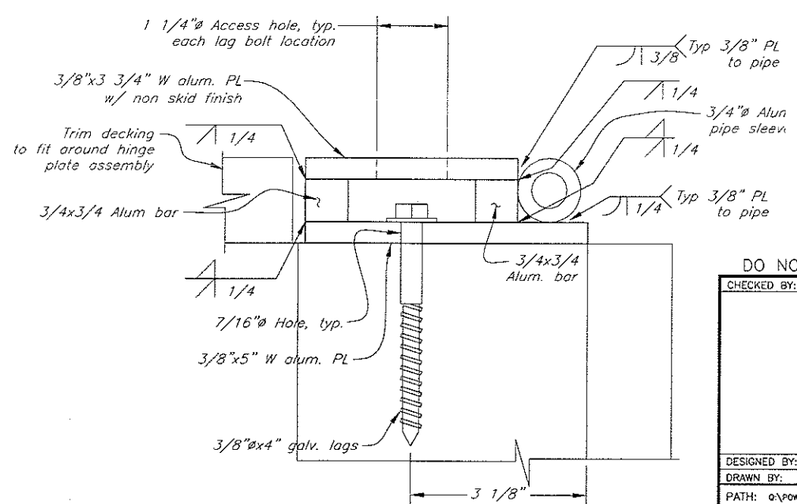

Section B–B

DO NOT SCALE FROM THESE DRAWINGS USE DIMENSIONS

CHECKED BY:

DESIGNED BY:

DRAWN BY:

STATE OF ALASKA
DEPARTMENT OF TRANSPORTATION
& PUBLIC FACILITIES
SOUTHEAST REGION

NAUKATI HARBOR IMPROVEMENTS PROJECT #69647

Main Float to Mooring Float Transition Plate

PATH: Q:\POW\69647\MF\PLANSET\20- GW FLOAT TRANS PL.DWG
TAB: 20 Thursday, June 30, 2011 10:40:03 AM FUNK, JOSEPH R (DOT)

REVISIONS			PROJECT DESIGNATION	YEAR	SHEET NO.	TOTAL SHEETS
NO.	DATE	DESCRIPTION	69647	2011	20	29

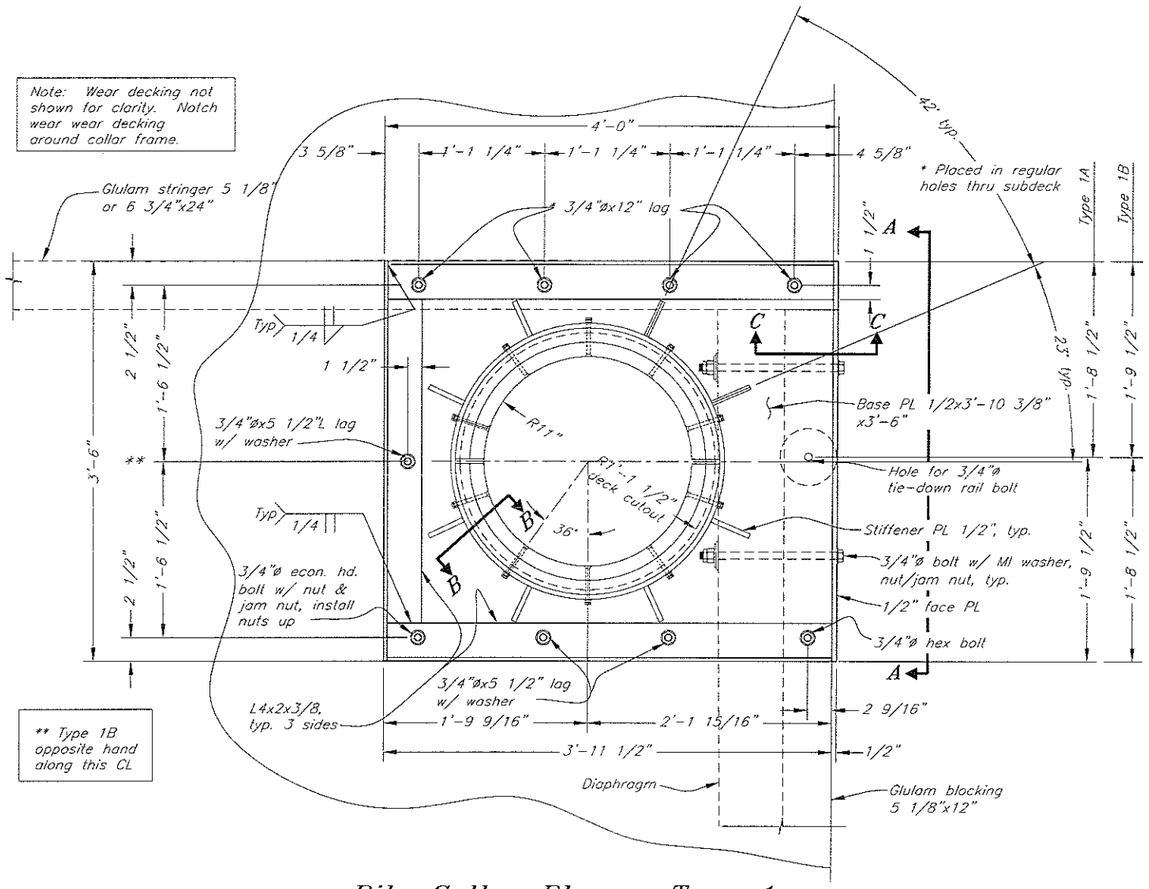

Pile Collar Plan - Type 1

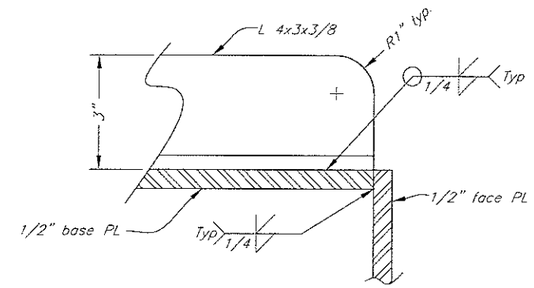

Section C-C

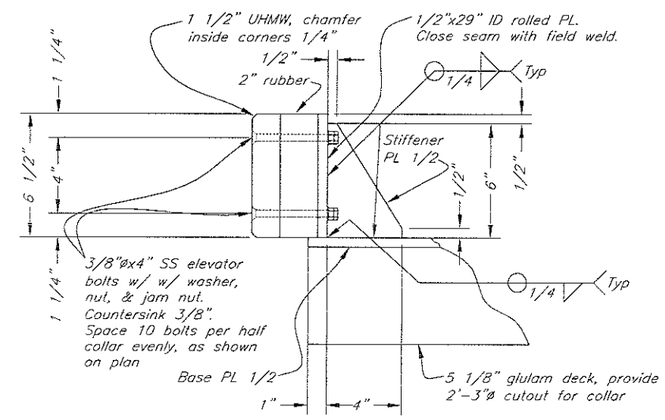

Section B-B

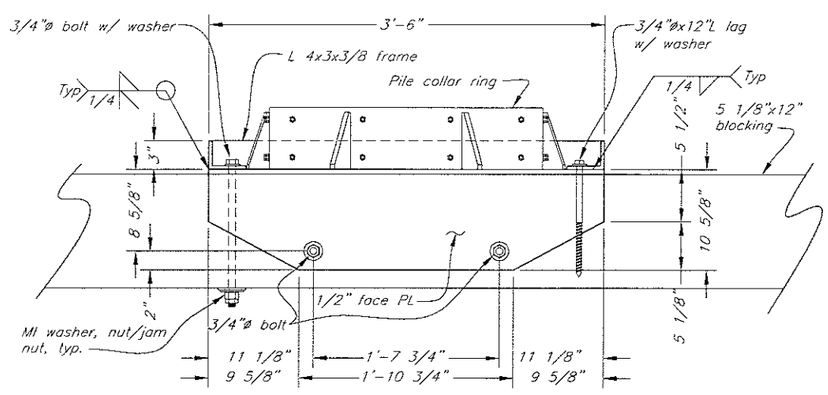

Elevation A-A

DO NOT SCALE FROM THESE DRAWINGS USE DIMENSIONS

CHECKED BY:

STATE OF ALASKA 49th Kirk D. Miller CE-8550 REGISTERED PROFESSIONAL ENGINEER

DESIGNED BY:

DRAWN BY:

STATE OF ALASKA
DEPARTMENT OF TRANSPORTATION
& PUBLIC FACILITIES
SOUTHEAST REGION

NAUKATI HARBOR IMPROVEMENTS PROJECT #69647

GANGWAY FLOAT PILE COLLAR - TYPE 1

PATH: Q:\POW\69647\MF\PLANSET\21- GW FLOAT PILE COLLAR 1.DWG
TAB: 21 Tuesday, July 05, 2011 9:02:41 AM FUNK, JOSEPH R (DOT)

REVISIONS			PROJECT DESIGNATION	YEAR	SHEET NO.	TOTAL SHEETS
NO.	DATE	DESCRIPTION	69647	2011	21	29

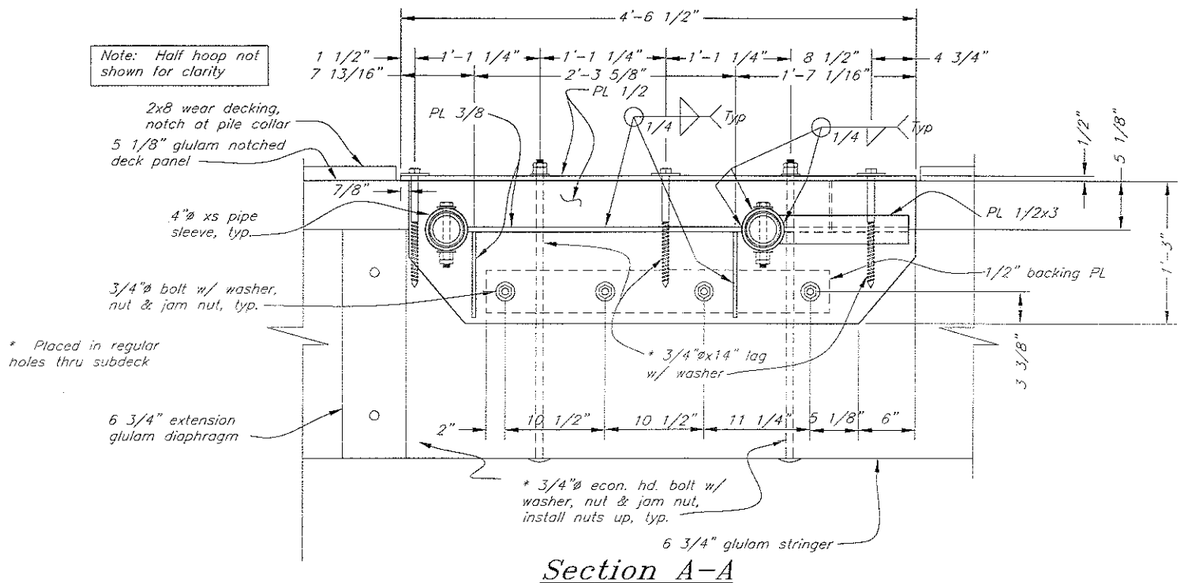

Section A–A

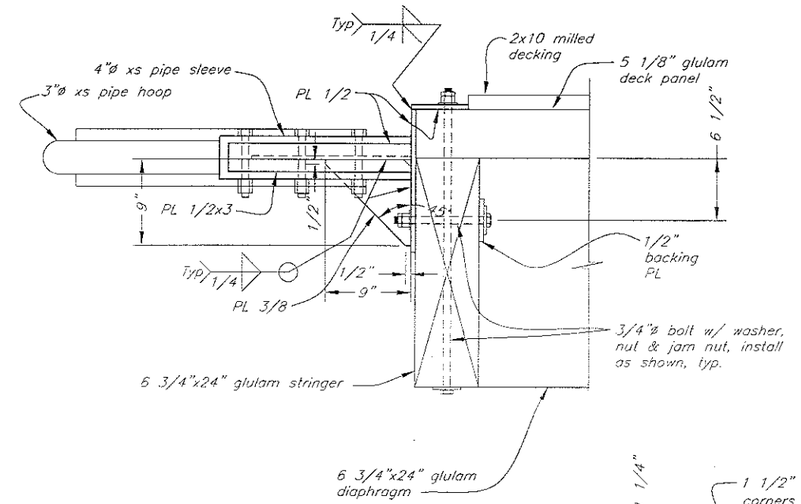

Side View

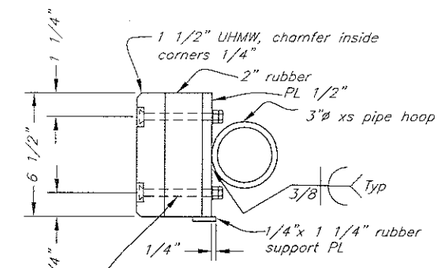

Section B–B

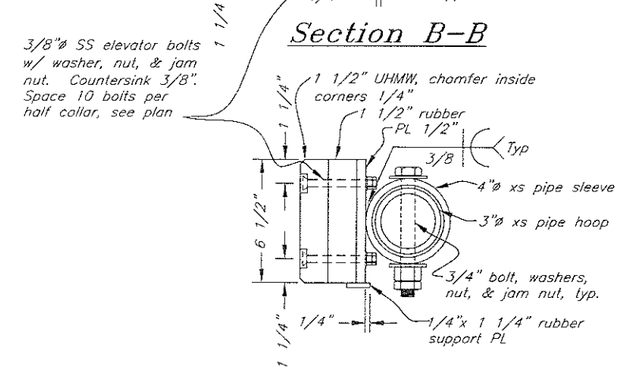

Section C–C

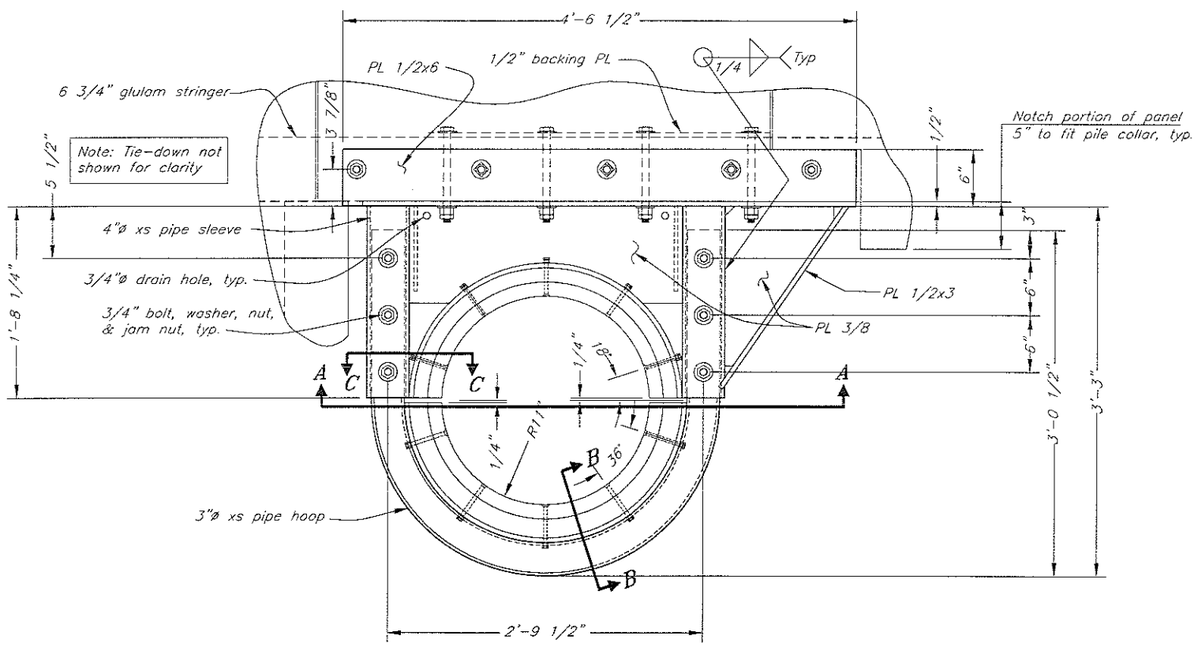

Pile Collar Plan – Type 2

(2 req'd, 1 as shown, 1 opposite hand)

Note: All welds may not be shown. Weld all contacts w/ 1/4" fillet weld unless otherwise noted.

DO NOT SCALE FROM THESE DRAWINGS USE DIMENSIONS

CHECKED BY:

DESIGNED BY:

DRAWN BY:

STATE OF ALASKA
DEPARTMENT OF TRANSPORTATION
& PUBLIC FACILITIES
SOUTHEAST REGION

NAUKATI HARBOR IMPROVEMENTS PROJECT #69647

GANGWAY FLOAT PILE COLLAR TYPE 2

PATH: Q:\POW\69647\MF\PLANSET\22- GW FLOAT PILE COLLAR 2.DWG
TAB: 22 Thursday, June 30, 2011 11:05:01 AM FUNK, JOSEPH R (DOT)

REVISIONS			PROJECT DESIGNATION	YEAR	SHEET NO.	TOTAL SHEETS
NO.	DATE	DESCRIPTION	69647	2011	22	29

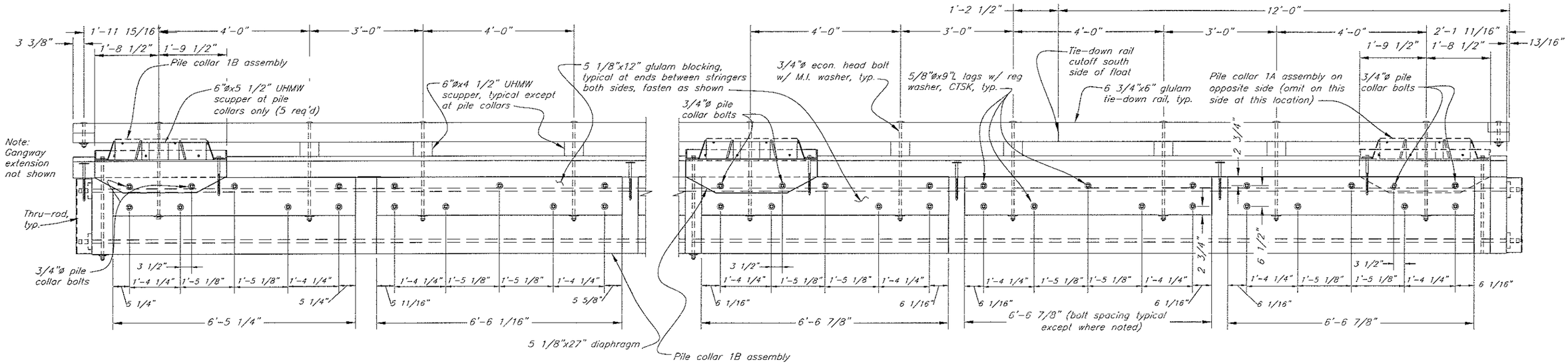

Shoreward Side

Note: Opposite side mirror image except as noted

Seaward Side

Blocking & Rail Elevation – Float Sides

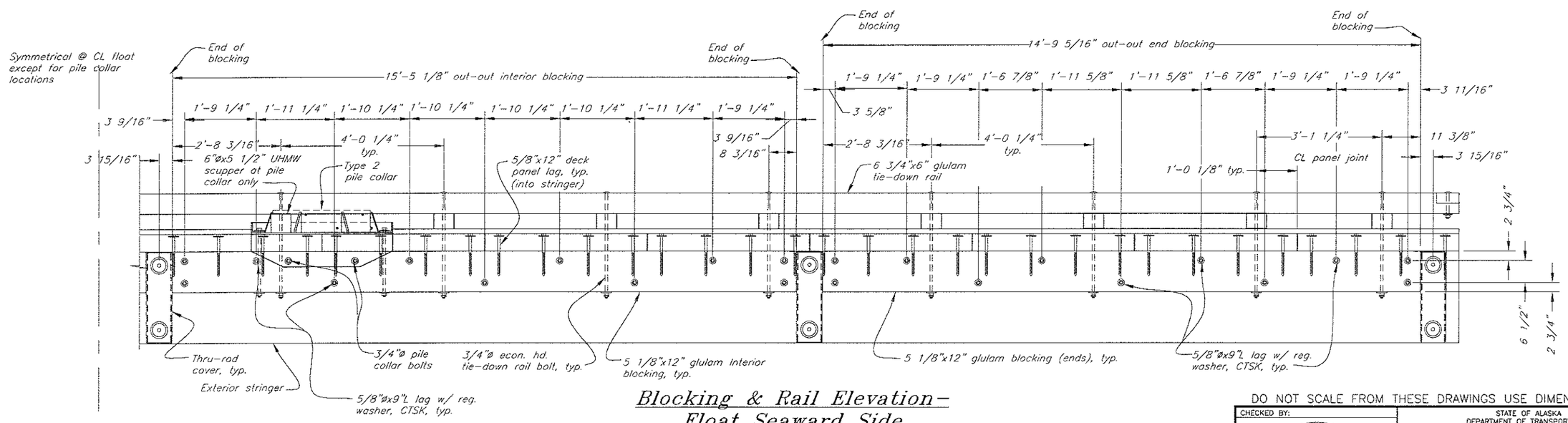

Blocking & Rail Elevation – Float Seaward Side

DO NOT SCALE FROM THESE DRAWINGS USE DIMENSIONS

CHECKED BY:

STATE OF ALASKA 49th Kirk D. Miller CE-8550 REGISTERED PROFESSIONAL ENGINEER

DESIGNED BY:

DRAWN BY:

STATE OF ALASKA
DEPARTMENT OF TRANSPORTATION
& PUBLIC FACILITIES
SOUTHEAST REGION

NAUKATI HARBOR IMPROVEMENTS PROJECT #69647

GANGWAY FLOAT EXTERIOR BLOCKING & RAIL

PATH: Q:\PDW\69647\MF\PLANSET\23- GW FLOAT BLOCKING.DWG
TAB: 23 Wednesday, July 06, 2011 2:35:58 PM FUNK, JOSEPH R (DOT)

REVISIONS			PROJECT DESIGNATION	YEAR	SHEET NO.	TOTAL SHEETS
NO.	DATE	DESCRIPTION	69647	2011	23	29

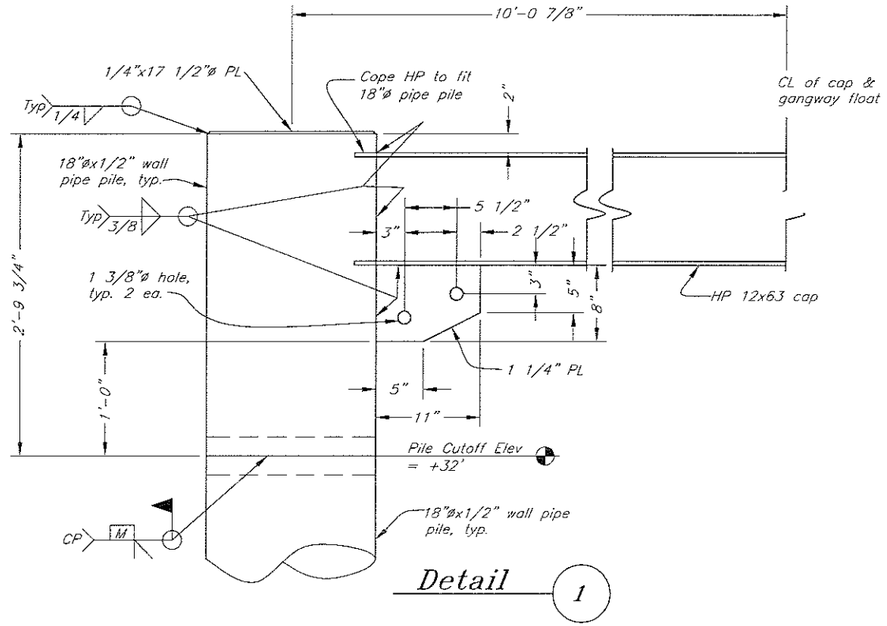

Detail 1

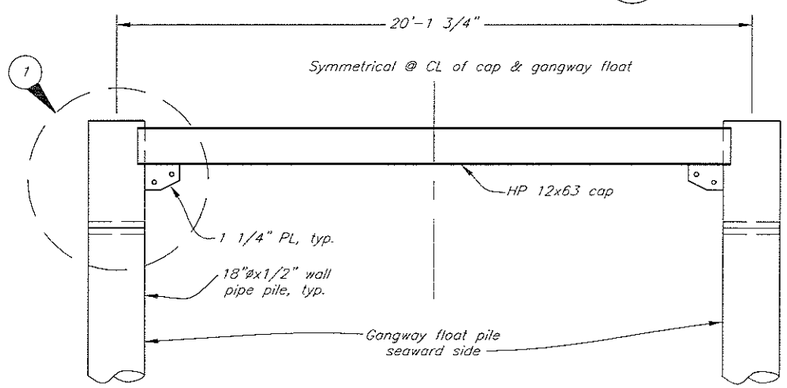

Note: See Electrical Plans for light fixtures & other items affixed to pile cap structure not shown.

Gangway Float Pile Cap

DO NOT SCALE FROM THESE DRAWINGS USE DIMENSIONS

CHECKED BY:

STATE OF ALASKA 49th Kirk D. Miller CE-8550 REGISTERED PROFESSIONAL ENGINEER

DESIGNED BY:

DRAWN BY:

STATE OF ALASKA
DEPARTMENT OF TRANSPORTATION
& PUBLIC FACILITIES
SOUTHEAST REGION

NAUKATI HARBOR IMPROVEMENTS PROJECT #69647

GANGWAY FLOAT PILE DETAILS

PATH: Q:\POW\69647\MF\PLANSET\24- GW PILE DETAILS.DWG
TAB: 24 Wednesday, July 06, 2011 2:37:32 PM FUNK, JOSEPH R (DOT)

REVISIONS			PROJECT DESIGNATION	YEAR	SHEET NO.	TOTAL SHEETS
NO.	DATE	DESCRIPTION	69647	2011	24	29

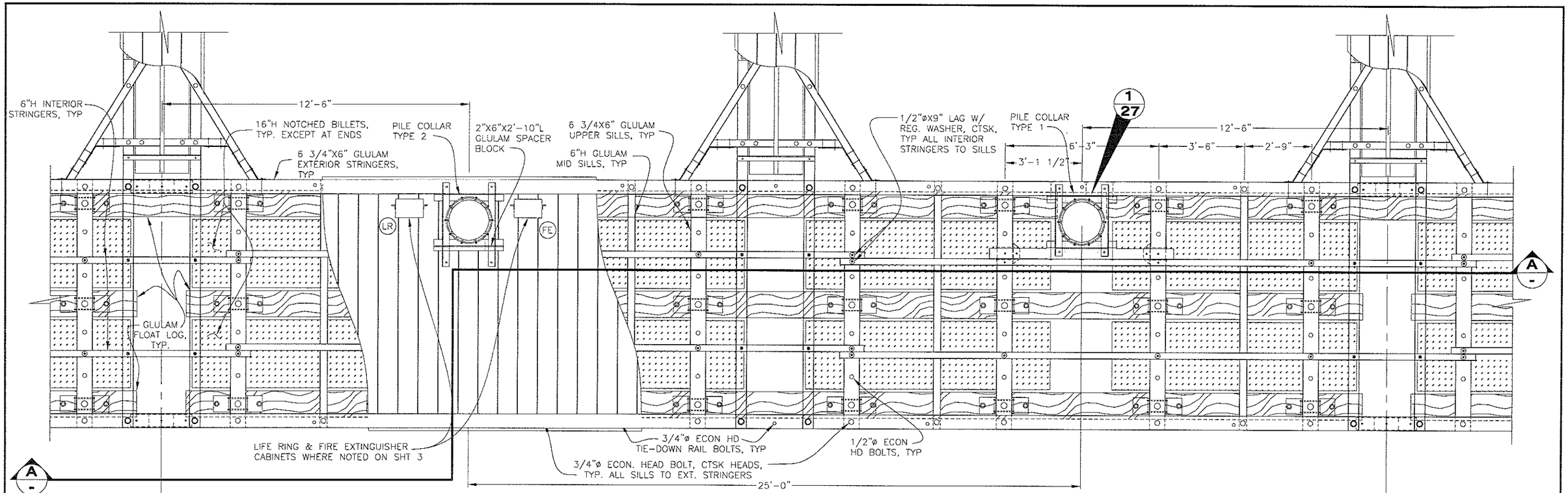

FLOAT FRAMING PLAN

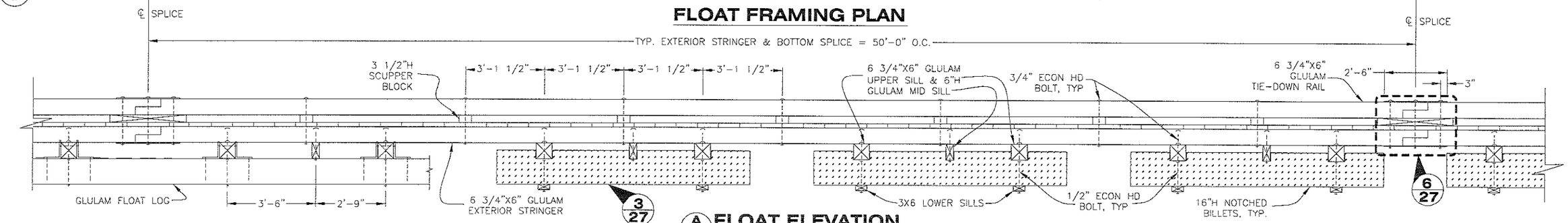

A/25 FLOAT ELEVATION

LEGEND:

(LR) LIFE RING CABINET, SEE SHEET 26

(FE) FIRE EXTINGUISHER CABINET, SEE SHEET 26

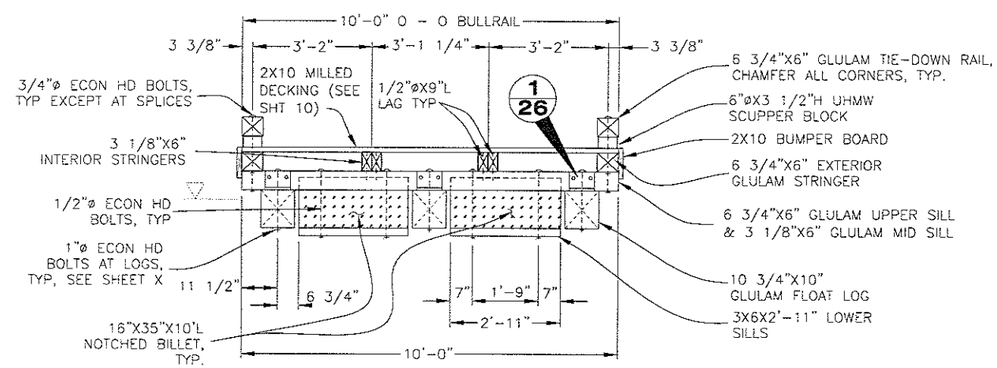

TYPICAL SECTION
10'-WIDE FLOAT

DO NOT SCALE FROM THESE DRAWINGS USE DIMENSIONS

CHECKED BY:

STATE OF ALASKA 49th Kirk D. Miller CE-8550 REGISTERED PROFESSIONAL ENGINEER

DESIGNED BY:

DRAWN BY:

STATE OF ALASKA
DEPARTMENT OF TRANSPORTATION
& PUBLIC FACILITIES
SOUTHEAST REGION

NAUKATI HARBOR IMPROVEMENTS PROJECT #69647

TIMBER MOORING FLOATS

PATH: G:\POW\69647\MF\PLANSET\25 - TIMBER MOORING FLOATS.DWG
TAB: 25 Tuesday, July 05, 2011 11:16:22 AM FUNK, JOSEPH R (DOT)

REVISIONS			PROJECT DESIGNATION	YEAR	SHEET NO.	TOTAL SHEETS
NO.	DATE	DESCRIPTION	69647	2011	25	29

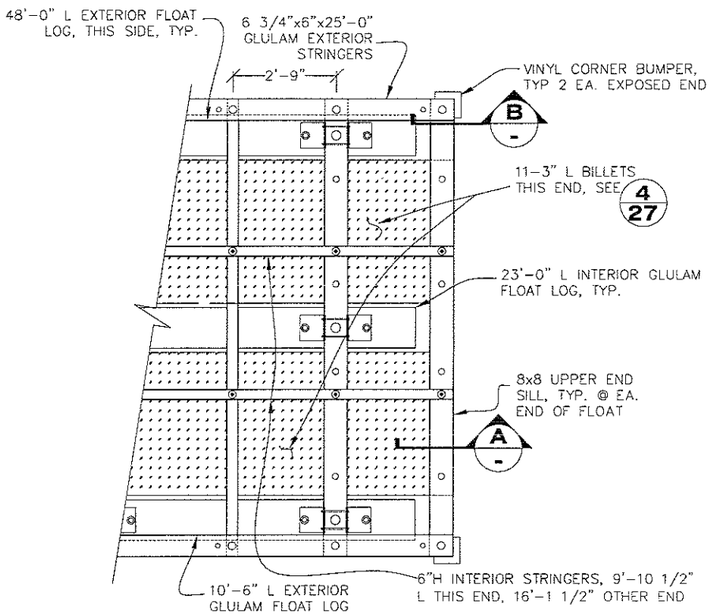

TYPICAL END FLOAT PLAN

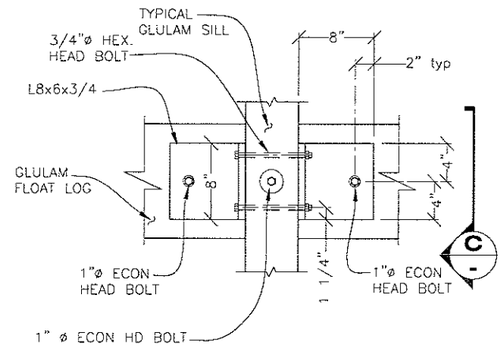

1/26 DETAIL
TYPICAL LOG TO SILL CONNECTION

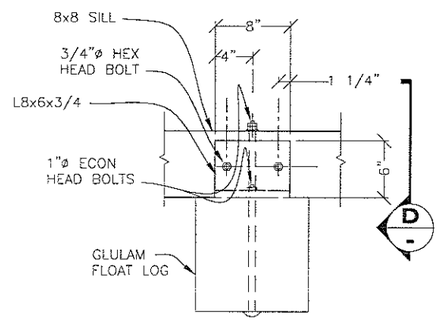

C/26 SECTION

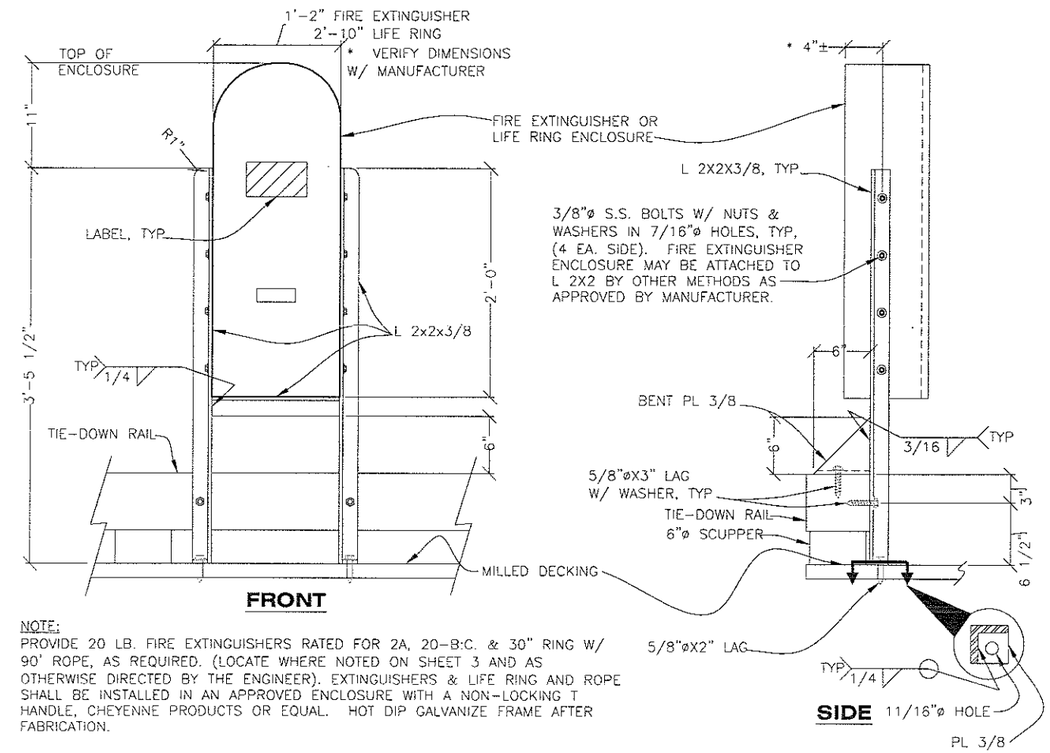

NOTE:
PROVIDE 20 LB. FIRE EXTINGUISHERS RATED FOR 2A, 20-B:C. & 30" RING W/ 90' ROPE, AS REQUIRED. (LOCATE WHERE NOTED ON SHEET 3 AND AS OTHERWISE DIRECTED BY THE ENGINEER). EXTINGUISHERS & LIFE RING AND ROPE SHALL BE INSTALLED IN AN APPROVED ENCLOSURE WITH A NON-LOCKING T HANDLE, CHEYENNE PRODUCTS OR EQUAL. HOT DIP GALVANIZE FRAME AFTER FABRICATION.

FIRE EXTINGUISHER/LIFE RING ENCLOSURE

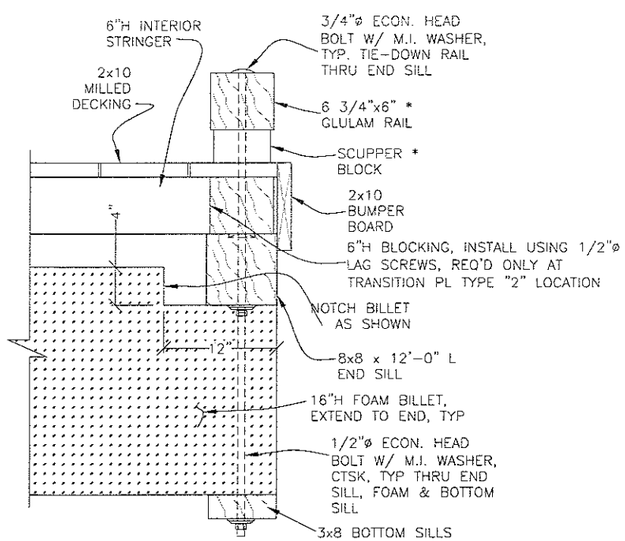

A/26 SECTION

* NOTE: OMIT GLULAM RAIL AT SOUTH END OF 12' FLOAT & EAST END OF 10' FLOAT.

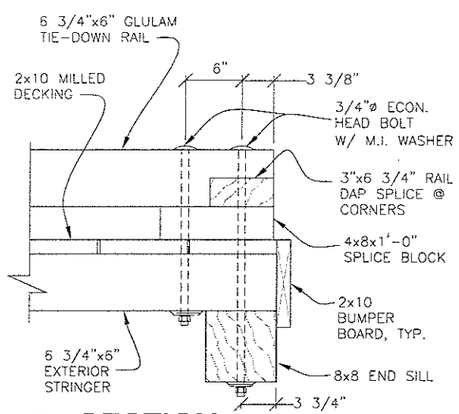

B/26 SECTION
NORTH END OF 12'-WIDE FLOAT & WEST END OF 10'-WIDE FLOAT

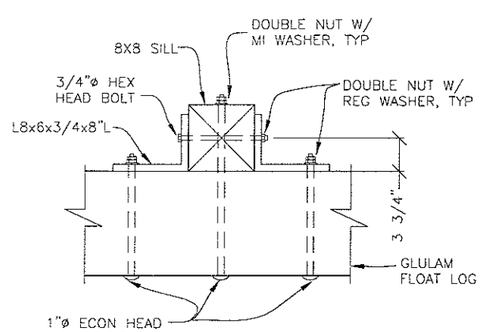

D/26 SECTION

DO NOT SCALE FROM THESE DRAWINGS USE DIMENSIONS

CHECKED BY: K. Miller

STATE OF ALASKA 49th Kirk D. Miller CE-8550 REGISTERED PROFESSIONAL ENGINEER

DESIGNED BY: J. Osburn
DRAWN BY: J. Osburn

STATE OF ALASKA
DEPARTMENT OF TRANSPORTATION & PUBLIC FACILITIES
SOUTHEAST REGION

NAUKATI HARBOR IMPROVEMENTS PROJECT #69647

END MOORING FLOAT & DETAILS

PATH: G:\POW\69647\WF\PLANSET\26 - END FLOAT & DETS.DWG
TAB: 26 Wednesday, July 06, 2011 2:55:01 PM FUNK, JOSEPH R (DOT)

REVISIONS			PROJECT DESIGNATION	YEAR	SHEET NO.	TOTAL SHEETS
NO.	DATE	DESCRIPTION	69647	2011	26	29

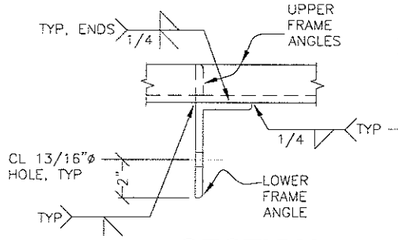

B/27 **SECTION**

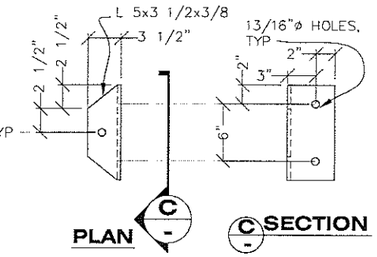

27/2 **DETAIL**
ANGLE BRACE

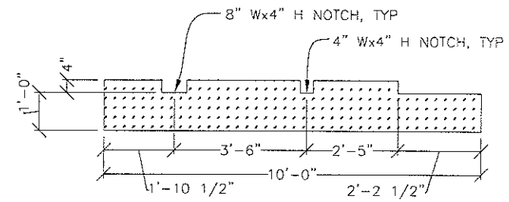

3/27 **DETAIL**
FLOAT BILLET TYPE 1 & 2

NOTES
TYPE 1 SHOWN, TYPE 2 IS MIRROR IMAGE.

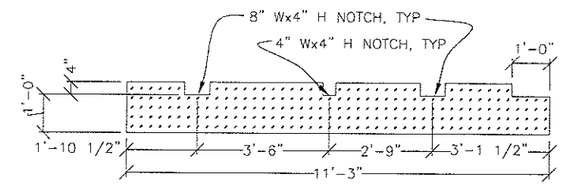

4/27 **DETAIL**
TYPICAL END FLOAT BILLET

NOTES
SOUTH END SHOWN, NORTH END IS MIRROR IMAGE.

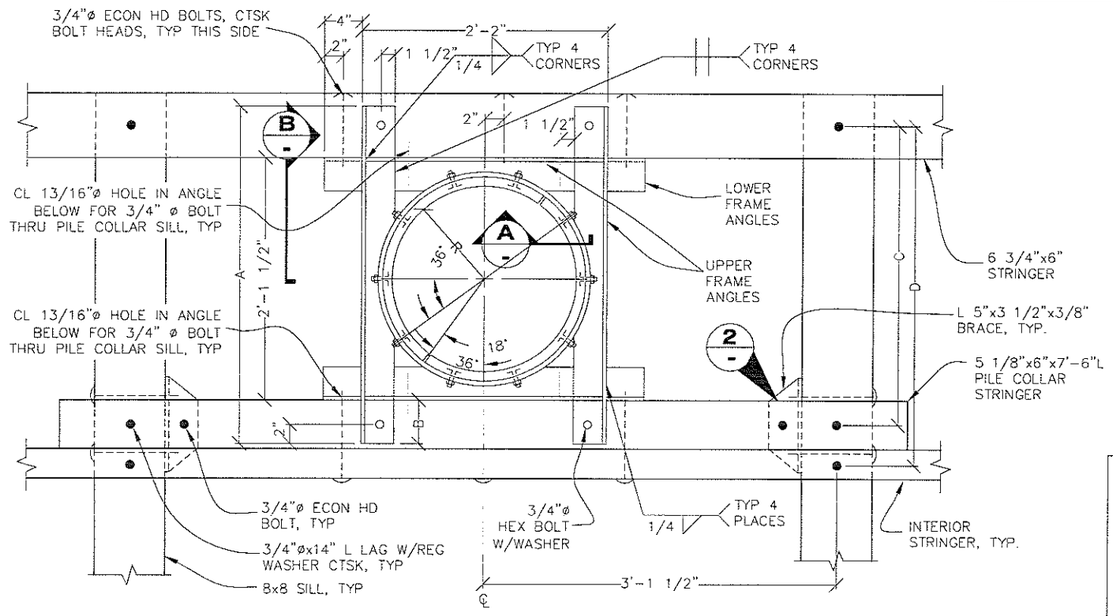

1/27 **DETAIL**
INTERIOR PILE COLLAR TYPE 1

TYPE 1:
A = 2'-11 7/16"
B = 4 9/16"
C = 2'-7 7/16"
D = 2'-11 11/16"

TYPE 2:
A = 3'-4 5/8"
B = 9 3/4""
C = 3'-0 9/16"
D = 2'-8 5/16"

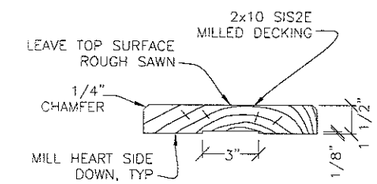

MILLED DECKING

PILE COLLAR NOTES

1. MATCH DECK BOARDS FLUSH W/ EDGES OF PILE COLLARS. NOTCH DECK BOARDS AROUND COLLAR ANGLES WHEN REQ'D.
2. SPLICE BOLT LENGTHS VARY DEPENDING ON THICKNESS OF BULLRAIL.
3. TYPE 2 ADD 2"X6"X2'-10" SPACER BLOCK BETWEEN PILE COLLAR AND PILE COLLAR STRINGER. SEE PLAN.

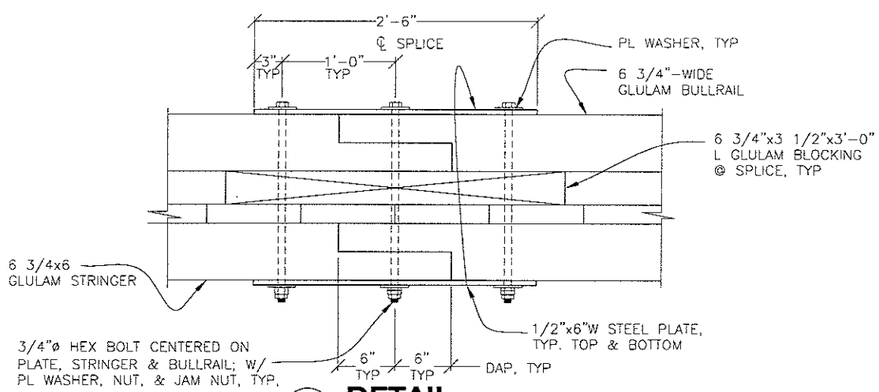

5/27 **DETAIL**
TYPICAL FLOAT SPLICE

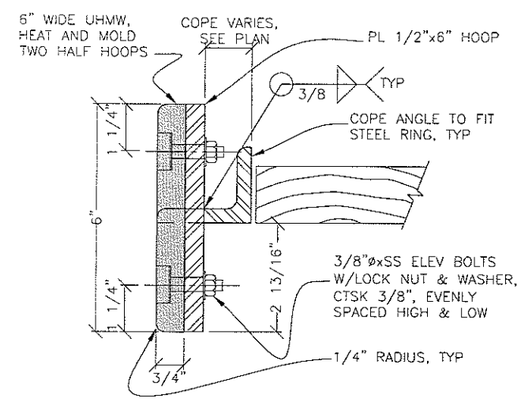

A/- **SECTION**
TYPICAL PILE COLLAR

DO NOT SCALE FROM THESE DRAWINGS USE DIMENSIONS

CHECKED BY: K. Miller

STATE OF ALASKA 49th K. Kirk D. Miller CE-8550 REGISTERED PROFESSIONAL ENGINEER

DESIGNED BY:
DRAWN BY:

STATE OF ALASKA
DEPARTMENT OF TRANSPORTATION & PUBLIC FACILITIES
SOUTHEAST REGION

NAUKATI HARBOR IMPROVEMENTS PROJECT #69647

PILE COLLARS & MISC FLOAT DETAILS

PATH: Q:\POW\69647\WF\PLANSET\27 - MISC FLOAT DETS.DWG
TAB: 27 Tuesday, July 05, 2011 11:55:52 AM FUNK, JOSEPH R (DOT)

REVISIONS			PROJECT DESIGNATION	YEAR	SHEET NO.	TOTAL SHEETS
NO.	DATE	DESCRIPTION	69647	2011	27	29

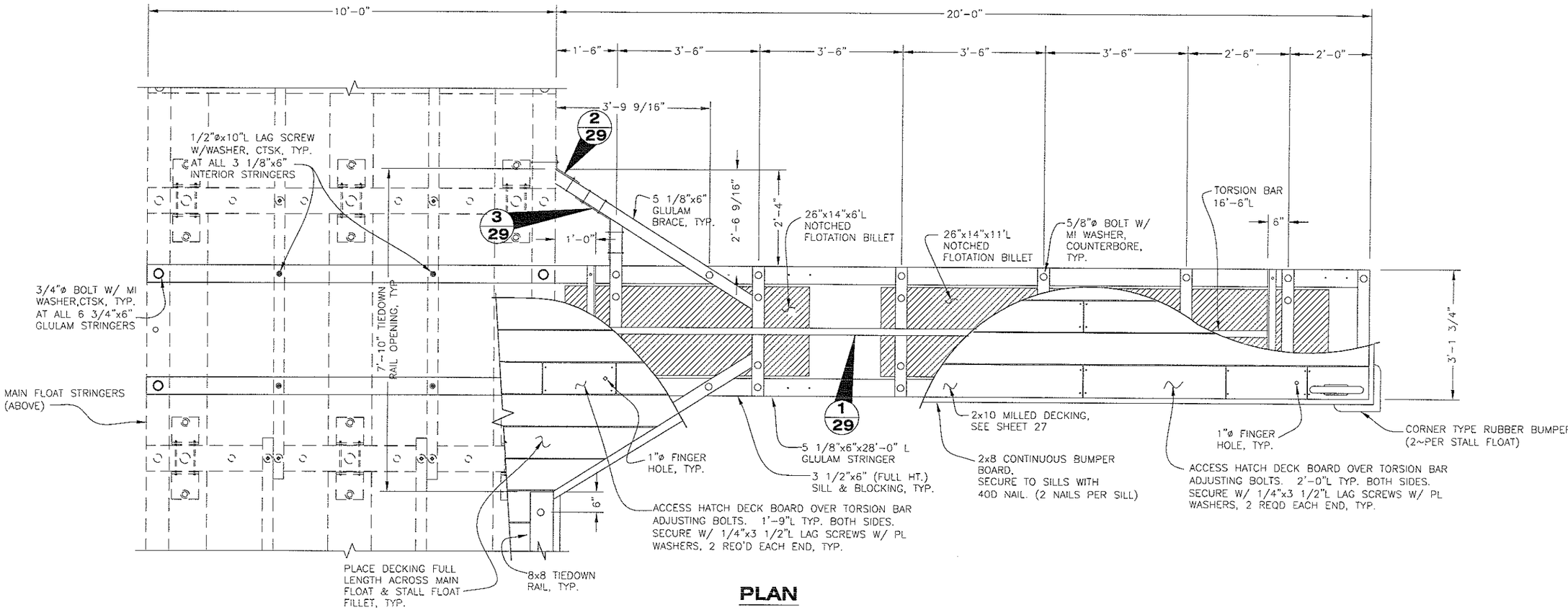

PLAN

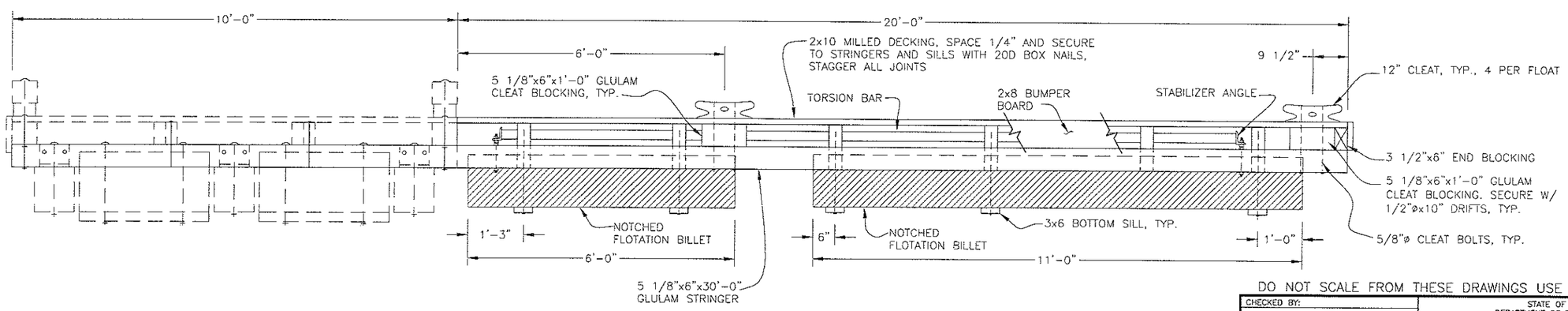

ELEVATION

DO NOT SCALE FROM THESE DRAWINGS USE DIMENSIONS

CHECKED BY:

STATE OF ALASKA 49th Kirk D. Miller CE-8550 REGISTERED PROFESSIONAL ENGINEER

DESIGNED BY:

DRAWN BY:

STATE OF ALASKA
DEPARTMENT OF TRANSPORTATION
& PUBLIC FACILITIES
SOUTHEAST REGION

NAUKATI HARBOR IMPROVEMENTS PROJECT #69647

TIMBER MOORING FLOATS

PATH: Q:\POW\69647\MF\PLANSET\28-3'x20' STALL FLOAT.DWG
TAB: 28 Tuesday, July 05, 2011 12:55:54 PM FUNK, JOSEPH R (DOT)

REVISIONS			PROJECT DESIGNATION	YEAR	SHEET NO.	TOTAL SHEETS
NO.	DATE	DESCRIPTION	69647	2011	28	29

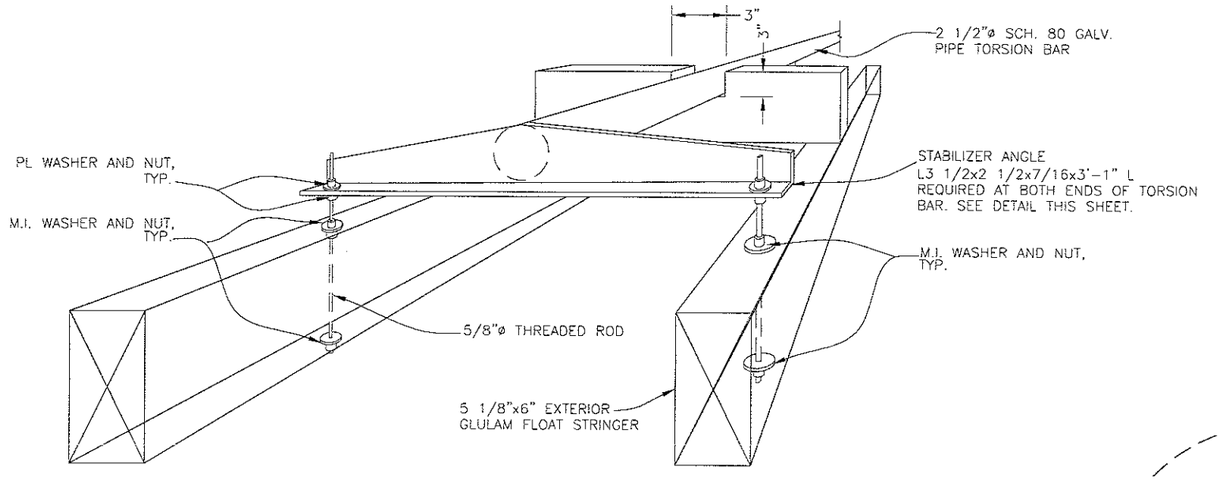

TO LEVEL FLOAT, TAKE-UP ON NUTS AS REQUIRED. LOOSEN NUTS ON OPPOSITE SIDE OF ANGLE IRON BEFORE ATTEMPTING ADJUSTMENT IN ORDER TO ALLOW UNRESTRICTED ROTATION. ADJUST ALL FLOATS.

STALL FLOAT STABILIZER DETAIL (1/29)

ISOMETRIC

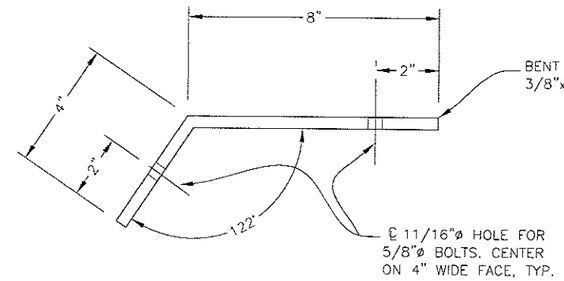

BRACE PLATE DETAIL (2/29)

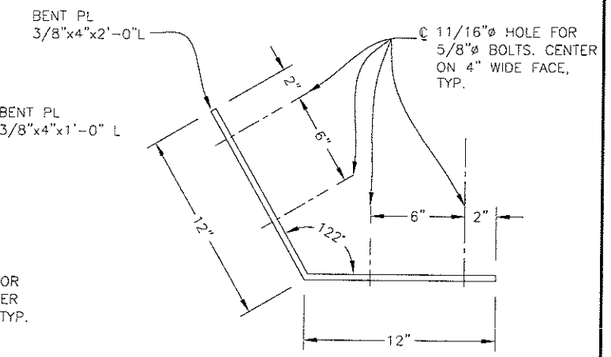

BRACE PLATE DETAIL (3/29)

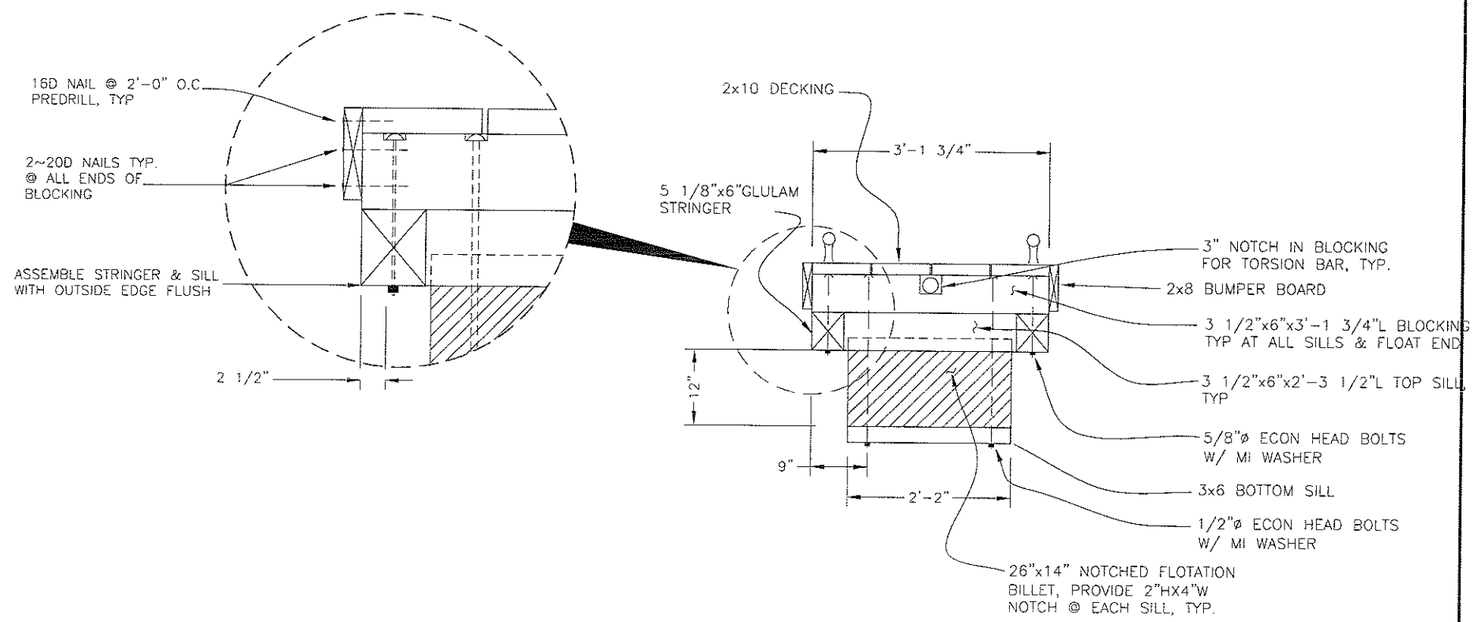

TYPICAL 3' WIDE STALL FLOAT SECTION

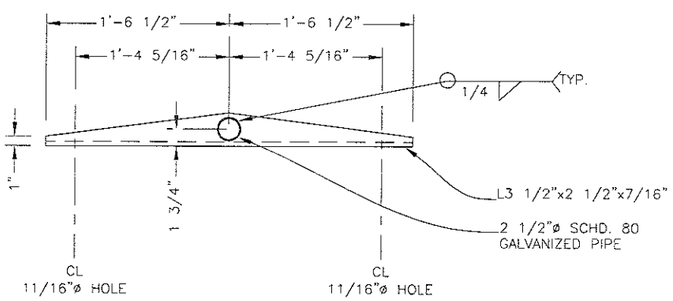

STABILIZER ANGLE DETAIL

END VIEW

DO NOT SCALE FROM THESE DRAWINGS USE DIMENSIONS

CHECKED BY:

STATE OF ALASKA 49th Kirk D. Miller CE-8550 REGISTERED PROFESSIONAL ENGINEER

DESIGNED BY:

DRAWN BY:

STATE OF ALASKA
DEPARTMENT OF TRANSPORTATION & PUBLIC FACILITIES
SOUTHEAST REGION

NAUKATI HARBOR IMPROVEMENTS PROJECT #69647

3'x20' STALL FLOAT DETAILS

PATH: Q:\POW\69647\MF\PLANSET\29-3'X20' STALL FLOAT DETAILS.DWG
TAB: 29 Tuesday, July 05, 2011 1:22:51 PM FUNK, JOSEPH R (DOT)

REVISIONS			PROJECT DESIGNATION	YEAR	SHEET NO.	TOTAL SHEETS
NO.	DATE	DESCRIPTION	69647	2011	29	29