State of Alaska

Department of Transportation and Public Facilities Southeast Region

GUSTAVUS PUBLIC DOCK AND FLOATS GUSTAVUS, ALASKA

STATE PROJECT No. 69909
DENALI COMMISSION No. 01158-00

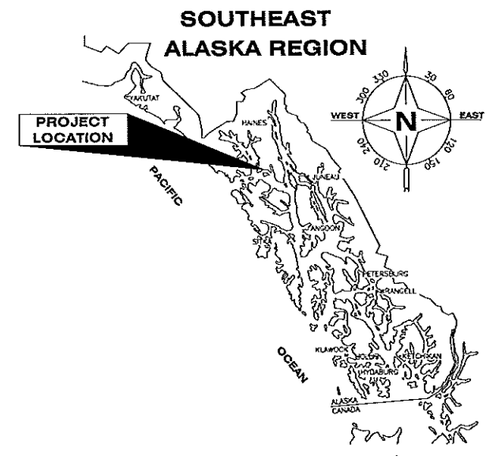

TIDAL DATA	
HTL	+20.0'
MHW	+13.7'
MLLW	0.0'
ELW	−5.0'

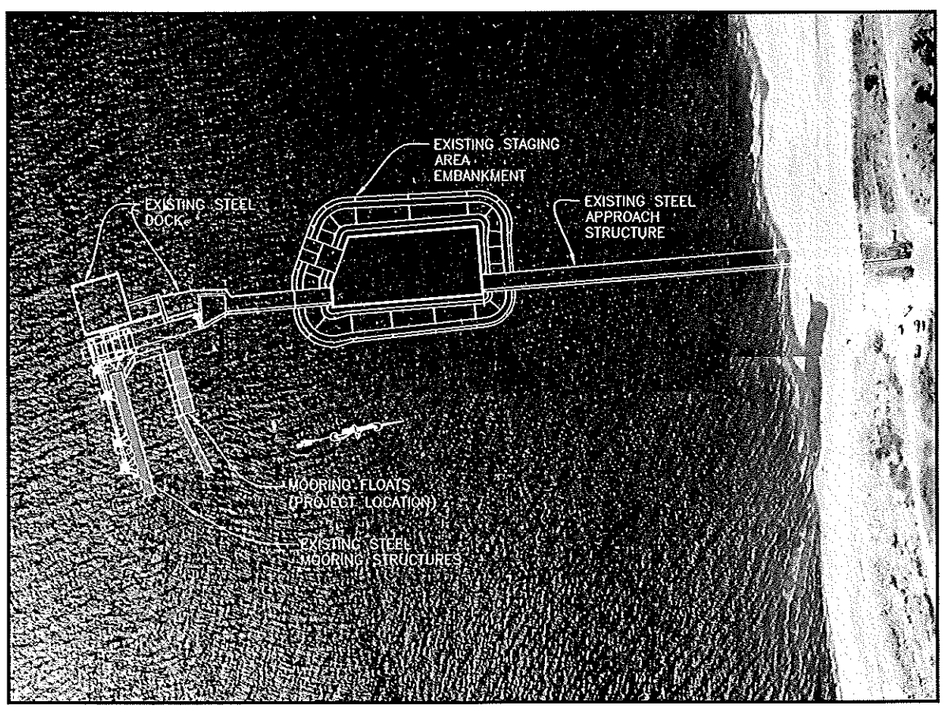

SITE MAP

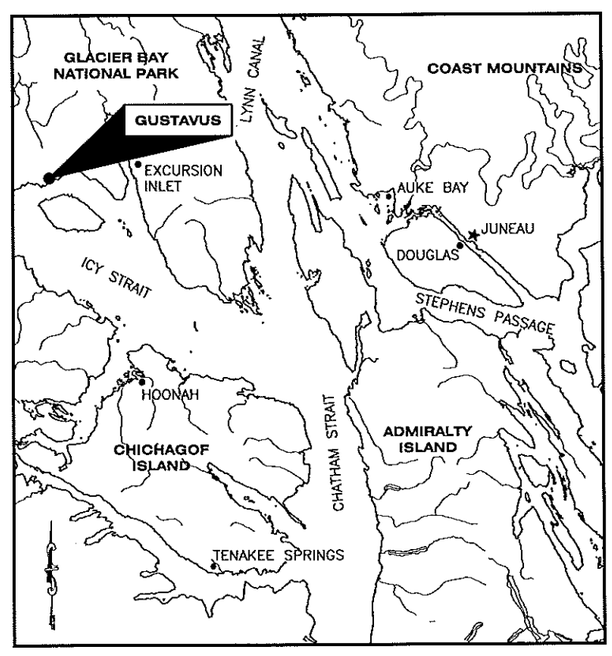

VICINITY MAP

SHEET INDEX

SHEET NO.	DESCRIPTION
01	TITLE SHEET
02	ESTIMATE OF QUANTITIES & GENERAL NOTES
03	SITE PLAN
04–06	18'x100' STEEL MOORING FLOAT
07–08	10'x28' TIMBER ACCESS FLOAT
09–11	12'x50' TIMBER MOORING FLOAT
12–13	25'x20' SKIFF FLOAT
14–15	TRANSITION PLATES

PATH: O:\GUS\68343\MF\PLANSET\FINAL SET\01 –TITLE SHEET.DWG TAB:01
Thursday, December 23, 2010 9:34:02 AM
PLOT: PSPACE OR MSPACE: 1=1(F)

STATE OF ALASKA
DEPARTMENT OF TRANSPORTATION & PUBLIC FACILITIES SOUTHEAST REGION

STATE OF ALASKA 49th Kirk D. Miller CE-8550 REGISTERED PROFESSIONAL ENGINEER

STATE OF ALASKA 49th David H. Lorell CE-12614 REGISTERED PROFESSIONAL ENGINEER

APPROVED:

REGIONAL PRE–CONSTRUCTION ENGINEER DATE
CHUCK CORREA, P.E.

APPROVED:

DIRECTOR, SOUTHEAST REGION DATE
GARY L. DAVIS

CERTIFIED TRUE & CORRECT AS–BUILT OF ACTUAL FIELD CONDITION:

CONSTRUCTION PROJECT MANAGER DATE

STATE	PROJECT DESIGNATION	YEAR	SHEET NO.	TOTAL SHEETS
ALASKA	69909/DC01158–00	2011	01	15

ESTIMATE OF QUANTITIES

ITEM NO.	PAY ITEM	UNIT	QUANTITY
	BASIC BID		
504 (1)	18'x200' STEEL MOORING FLOAT	LS	ALL REQ'D
504 (2)	ALUMINUM TRANSITION PLATES, TYPE 1 & 2	EA	3
505 (1)	12 3/4" DIA x 1/2" WALL PIPE PILES, FURNISHED	LF	152
505 (2)	12 3/4" DIA x 1/2" WALL PIPE PILES, DRIVEN	EA	2
505 (5)	30" DIA x 1/2" WALL PIPE PILES, FURNISHED	LF	1030
505 (6)	30" DIA x 1/2" WALL PIPE PILES, DRIVEN	EA	10
505 (8)	100 LB. PILE ANODE	EA	12
506 (1)	10'x28' TIMBER ACCESS FLOAT	LS	ALL REQ'D
506 (4)	LEVELING FLOTATION BILLET, 5"x20"x4'-6"L, FURNISHED	EA	2
506 (5)	LEVELING FLOTATION BILLET, 10"x20"x9'--0"L, FURNISHED	EA	4
506 (6)	LEVELING FLOTATION BILLET, INSTALLED	EA	6
640 (1)	MOBILIZATION & DEMOBILIZATION	LS	ALL REQ'D
640 (4)	WORKER MEALS & LODGING, OR PER DIEM	LS	ALL REQ'D
641 (1)	EROSION & POLLUTION CONTROL ADMINISTRATION	LS	ALL REQ'D
641 (2)	TEMPORARY EROSION & POLLUTION CONTROL	CS	ALL REQ'D
642 (1)	CONSTRUCTION SURVEYING	LS	ALL REQ'D
	ALTERNATE A		
202 (1A)	REMOVAL & DISPOSAL OF EXISTING FLOAT	LS	ALL REQ'D
504 (2A)	ALUMINUM TRANSITION PLATES, TYPE 3	EA	1
505 (3A)	16" DIA x 1/2" WALL PIPE PILES, FURNISHED	LF	128
505 (4A)	16" DIA x 1/2" WALL PIPE PILES, DRIVEN	EA	2
505 (7A)	REMOVE & RE-DRIVE EXISTING 16" DIA PIPE PILE	EA	2
505 (8A)	100 LB. PILE ANODE	EA	4
506 (2A)	12'x50' TIMBER MOORING FLOAT	EA	2
506 (4A)	LEVELING FLOTATION BILLET, 5"x20"x4'-6"L, FURNISHED	EA	4
506 (6A)	LEVELING FLOTATION BILLET, INSTALLED	EA	4
	ALTERNATE B		
506 (3B)	25'x20' SKIFF FLOAT	EA	4

NOTE:
1. ALL ELEVATIONS ARE IN FEET REFERENCED TO MLLW.
2. DRIVE ALL PILES TO ESTIMATED TIP ELEVATION OR REFUSAL.
3. 16"ø RE-DRIVE PILE LENGTH UNKNOWN. DRIVE PILE TO ESTIMATED TIP ELEVATION. ADDITIONAL LENGTH MAY BE REQUIRED TO ACHIEVE THE LISTED CUTOFF ELEVATION.
4. CONICAL CAPS REQUIRED ON ALL EXISTING AND NEW PILES. SEE SHEET 3 FOR PILE SIZES AND QUANTITIES.

PILE DATA

LOCATION	PILE SIZE	QUANTITY	APPROX MUDLINE ELEV	ESTIMATED PENETRATION	ESTIMATED TIP ELEV	CUTOFF ELEV	ESTIMATED PILE LENGTH
STEEL MOORING FLOAT	30"ø x 1/2"	10	-30.0'	45'	-75.0'	+28.0'	103'
12' WIDE TIMBER FLOAT	16"ø x 1/2"	2	-12.0'	24'	-36.0'	+28.0'	64'
	16"ø RE-DRIVE	2	-12.0'	24'	-36.0'	+28.0'	64'
10' WIDE TIMBER FLOAT	12 3/4"ø x 1/2"	2	-27.0'	21'	-48.0'	+28.0'	76'

GENERAL NOTES

DESIGN SPECIFICATIONS

PER CONTRACT DOCUMENTS, SEE SPECIAL PROVISIONS. REFERENCE AS-BUILT DRAWINGS FOR EXISTING HARBOR FEATURES NOT SHOWN.

MATERIALS

STEEL:
- HSS- ASTM A500 GRADE B
- PILING- SEE SECTION 505 OF SPECIFICATIONS
- PIPE- ASTM A53, GRADE B
- PONTOONS- SEE SECTION 504 OF SPECIFICATIONS
- HORIZ STRUT- SEE SECTION 504 OF SPECIFICATIONS
- W-SECTION- ASTM A992
- PLATES- ASTM A36, UNLESS OTHERWISE NOTED
- STAINLESS- ASTM A276 TYPE 316
- PILE TIPS- APF-0-14000 OR APF 0-14001 DRIVE SHOES OR APPROVED EQUAL. DRIVESHOES ARE REQUIRED ON ALL PILING.
- GRATING- WELDED W/ 1/8" BEARING BARS SPACED AT 1 3/16", SERRATED TOP
- FASTENERS- STEEL CONNECTIONS: ASTM A325
  TIMBER CONNECTIONS: ASTM A307
  ALUMINUM CONNECTIONS: ASTM A276 TYPE 316
- PROTECTIVE COATINGS-
  FLOTATION PONTOON, HORIZONTAL STRUT, & DECK BEAMS TO BE THERMALLY SPRAY METALLIZED ACCORDING TO COATING SYSTEM 10 AND TOP COATED TO COATING SYSTEM 1 OF THE SPECIFICATIONS.

  ALL OTHER SHAPES, DECKING, FASTENERS AND MISCELLANEOUS ASSEMBLIES TO BE HOT DIP GALVANIZED AFTER FABRICATION IN CONFORMANCE WITH ASTM A123.

ALUMINUM:
- SHAPES- ASTM 6061-T6
- PLATES- ASTM 5068 H112
- COATINGS- TRANSITION PLATES TO BE COATED WITH NON-SKID COATING IN CONFORMANCE WITH PROJECT SPECS.

TIMBER:
- SAWN- S4S DOUGLAS FIR NO. 1 OR BETTER PER WCLIB/WWPA GRADING RULES.
- DECKING- MILLED S1S2E DOUGLAS FIR SELECTED GRADE PER WWPA GRADING RULES.
- GLULAM- DF/DF, COMBINATION 24F-V8
- TREATMENT- SAWN TIMBER BELOW DECK LEVEL TO BE TREATED WITH CREOSOTE, 20 PCF RETENTION. GLULAM TIMBER BELOW DECK LEVEL TO BE TREATED WITH CREOSOTE, 12 PCF RETENTION. DECKING, BULL RAILS, AND BUMPER BOARDS TO BE TREATED WITH ACZA, 0.6 PCF RETENTION.

UHMW:
ULTRA HIGH MOLECULAR WEIGHT PLASTIC (UHMW) TO BE MADE FROM MATERIALS CONFORMING TO ASTM D4020, COLOR TO BE BLACK UNLESS OTHERWISE NOTED.

SQUARE FENDERS:
SQUARE FENDERS TO BE HEAVY DUTY, MARINE GRADE RUBBER TYPE.

POLYSTYRENE FLOTATION:
FLOTATION PLANKS SHALL BE CONSTRUCTED FROM CLOSED CELL EXPANDED POLYSTYRENE (EPS) PER ASTM D1621. MINIMUM DENSITY SHALL BE 1.1 PCF. MATERIALS SHALL HAVE A MAXIMUM WATER ABSORPTION OF 4 PERCENT BY VOLUME IN ACCORDANCE WITH ASTM C272. THE PLANKS SHALL BE CUT AND NOTCHED TO THE NOMINAL DIMENSIONS INDICATED ON THE PLANS. ALL NOTCHES AND CUTS SHALL BE PERFORMED USING A HOT-WIRE OR OTHER APPROVED METHODS. ALL FLOTATION PLANKS SHALL BE COATED AFTER FABRICATION WITH A POLYURETHANE ELASTOMERIC COATING TO A MINIMUM DRY FILM THICKNESS OF 50 MILS. POLYURETHANE COATINGS SHALL BE "HYDROSEAL 2090" BRAND OR APPROVED EQUAL. ALL FIELD CUTS, NICKS AND ABRASIONS TO THE COATING SHALL BE REPAIRED WITH ADDITIONAL COATINGS TO THE SPECIFIED THICKNESS.

FABRICATION

WELDING:
ALL WELDING TO BE DONE BY QUALIFIED WELDERS IN ACCORDANCE WITH AWS D1.1 OR AWS D1.2. ALL WELDS TO BE 1/4 FILLET UNLESS OTHERWISE NOTED.

TIMBER FLOAT SYSTEM:
ALL FABRICATION AND CONNECTION DETAILS MAY NOT BE SHOWN. PROVIDE DETAILED SHOP DRAWINGS SHOWING ALL MEMBERS AND FABRICATION SEQUENCE.

MACHINE OR POWER DRIVEN NAILS WILL NOT BE PERMITTED.

FOR LEVELING THE TIMBER FLOATS AND THE STALL FLOATS, THE CONTRACTOR SHALL PROVIDE LEVELING FLOTATION BILLETS AS NOTED ON THE BID SCHEDULE AND 1/2" DIA. X 20" LONG TREATED WOODEN DOWELS POINTED ON ONE END OR 1/2"ø PVC PIPE AT SHARP BEVEL IN ONE END. PROVIDE A MINIMUM OF 4 DOWELS PER LEVELING BILLET. WHERE LEVELING IS REQUIRED, PLACE LEVELING BILLET BETWEEN LOWER SILL MEMBERS AND DRIVE DOWELS THROUGH THE FLOTATION BILLETS. PIN EACH LEVELING BILLET WITH 4 DOWELS EQUALLY SPACED. DOWELS MAY BE DRIVEN FROM THE TOP DOWN BETWEEN DECK BOARDS.

ALL TIMBER BOLTS ARE ECONOMY HEAD TYPE WITH LUGS AND M.I. WASHERS, UNLESS OTHERWISE NOTED. PROVIDE DOUBLE NUTS OR JAM NUTS WHERE NOTED ON THE PLANS.

ALIGN BUMPER BOARD SPLICES WITH EXTERIOR STRINGER SPLICES, MINIMUM BUMPER BOARD LENGTH IS 10'-0". SECURE BUMPER BOARDS WITH 16D GALV COMMON NAILS SPACED AT 12" OC, STAGGERED ROW AND 2 NAILS AT EACH END. PREDRILL PILOT HOLE TO PREVENT SPLITTING.

DECKING SHALL BE SPACED ¼" APART AND SECURED TO EACH STRINGER WITH 2~20D GALVANIZED BOX NAILS. PREDRILL ALL ENDS WHERE SPLITING MAY OCCUR.

COUNTERBORE FOR ALL BOLT HEADS FACING DECKING OR OTHERWISE NOTED TO BE FLUSH.

CUT ALL MEMBERS TO LENGTH PRIOR TO PRESSURE TREATMENT. DRILL ALL HOLES/COUNTERBORING AND CUT ALL DAPS PRIOR TO PRESSURE TREATMENT UNLESS OTHERWISE SPECIFIED OR APPROVED BY THE ENGINEER. TREAT ALL FIELD DRILLED HOLES AND CUTS WITH COPPER NAPHTHENATE SOLUTION.

STEEL FLOAT SYSTEM:
FLOTATION PONTOON SPLICES SHALL BE FULL PENETRATION WELDS AND BE LIMITED TO (2) PER FLOAT MODULE.

PRESSURE TESTING OF PONTOONS AND HORIZONTAL STRUTS IS REQUIRED. SEE SECTION 504 OF THE SPECIFICATIONS FOR DETAILS.

UNLESS OTHERWISE NOTED, ALL BOLTED CONNECTIONS ARE PRETENSIONED USING 3/4"ø ASTM A325 BOLTS. PRETENSION ACCORDING TO "SPECIFICATION FOR STRUCTURAL JOINTS USING ASTM A325 OR A490 BOLTS" (RCSC) METHODS 8.2.1 TURN-OF-NUT PRETENSIONING OR 8.2.4 DIRECT-TENSION-INDICATOR PRETENSIONING. INSPECT IN ACCORDANCE WITH 9.2 PRETENSIONED JOINTS.

DO NOT SCALE FROM THESE DRAWINGS USE DIMENSIONS

CHECKED BY: K. MILLER

STATE OF ALASKA 49th David H. Lowell CE-12614 REGISTERED PROFESSIONAL ENGINEER

DESIGNED BY: D. LOWELL
DRAWN BY: D. LOWELL

STATE OF ALASKA
DEPARTMENT OF TRANSPORTATION
& PUBLIC FACILITIES
SOUTHEAST REGION

GUSTAVUS PUBLIC DOCK AND FLOATS PROJECT #69909
ESTIMATE OF QUANTITIES & GENERAL NOTES

PATH: O:\GUS\68343\MF\PLANSET\FINAL SET\02 - ESTIMATE OF QUANTITIES.DWG
TAB: 02 Friday, March 18, 2011 11:20:31 AM LOWELL, DAVID H (DOT)

REVISIONS NO.	DATE	DESCRIPTION	PROJECT DESIGNATION	YEAR	SHEET NO.	TOTAL SHEETS
			69909/DC01158-00	2011	02	15

EXISTING STEEL APPROACH TRANSITION

EXISTING SHEET PILE WAVE BARRIER

EXISTING GANGWAY

EXISTING STEEL FRAME DOCK

EXISTING DOLPHIN

EXISTING 24'x142' TRANSFER BRIDGE

INSTALL 10"x20"x9'-0"L FLOTATION BILLETS UNDER EXISTING 12'x50' TIMBER LOG FLOAT AS REQ'D TO LEVEL FLOAT AND AS DIRECTED BY THE ENGINEER

ALTERNATE "B"

NEW 25'x20' SKIFF FLOAT, 4EA

ALTERNATE "A"

FLOAT TRANSITION PL ASSEMBLY TYPE "3"

ALTERNATE "A"

NEW 12'x50' TIMBER LOG FLOAT, 2 EA, W/NEW 16"ø PIPE PILES, 2 EA, & SALVAGED 16"ø PIPE PILES, 2 EA

FLOAT TRANSITION PL ASSEMBLY, TYPE "2"

EXISTING TIMBER SECTIONAL FLOAT W/12 3/4"ø PIPE PILES, 4 EA, TO REMAIN

EXISTING TIMBER LOG FLOAT W/12 3/4"ø PIPE PILES, 3 EA, TO REMAIN

3'-9"

END OF EXISTING FLOAT

EXISTING 12'x50' TIMBER FLOAT TO BE REMOVED & DISPOSED, REMOVE & RE-DRIVE EXISTING 16"ø PIPE PILES, 2 EA

EXISTING FLOAT ACCESS RAMP TO REMAIN

FLOAT TRANSITION PL ASSEMBLY, TYPE "2"

NEW 10'x28' TIMBER ACCESS FLOAT W/NEW 12 3/4"ø PIPE PILES, 2 EA

FLOAT TRANSITION PL ASSEMBLY, TYPE "1"

NEW 18'x100' STEEL MOORING FLOAT, 2 EA, W/NEW 30"ø PIPE PILES, 10 EA

℄ 30"ø PIPE PILES

℄ 30" PIPE PILES @ E1 & E4

EXISTING GANGWAY

EXISTING CATWALK, TYP

EXISTING BREASTING DOLPHIN

EXISTING BREASTING DOLPHIN

EXISTING DOLPHIN

44'-0"

149'-6"

167'-7"

103'-3"

122'-0"

39'-10"

16'-1"

50'-0" | 75'-0" | 30'-3" | 30'-0" | 45'-1" | 74'-11" | 40'-0" | 58'-0"

W1 E1 E2 E3 E4 E5

RW ELW

VERTICAL CONTROL:

TOP OF EXISTING STEEL DOCK GRATING = +25.00'

DO NOT SCALE FROM THESE DRAWINGS USE DIMENSIONS

SITE PLAN

CHECKED BY: K. MILLER

STATE OF ALASKA 49th David H. Lowell CE-12614 REGISTERED PROFESSIONAL ENGINEER

DESIGNED BY: D. LOWELL

DRAWN BY: D. LOWELL

STATE OF ALASKA
DEPARTMENT OF TRANSPORTATION
& PUBLIC FACILITIES
SOUTHEAST REGION

GUSTAVUS PUBLIC DOCK AND FLOATS PROJECT #69909

SITE PLAN & SURVEY CONTROL

PATH: Q:\GUS\68343\MF\PLANSET\FINAL SET\03 - SITE PLAN.DWG
TAB: 03 Friday, March 18, 2011 11:20:41 AM LOWELL, DAVID H (DOT)

REVISIONS			PROJECT DESIGNATION	YEAR	SHEET NO.	TOTAL SHEETS
NO.	DATE	DESCRIPTION	69909/DC01158-00	2011	03	15

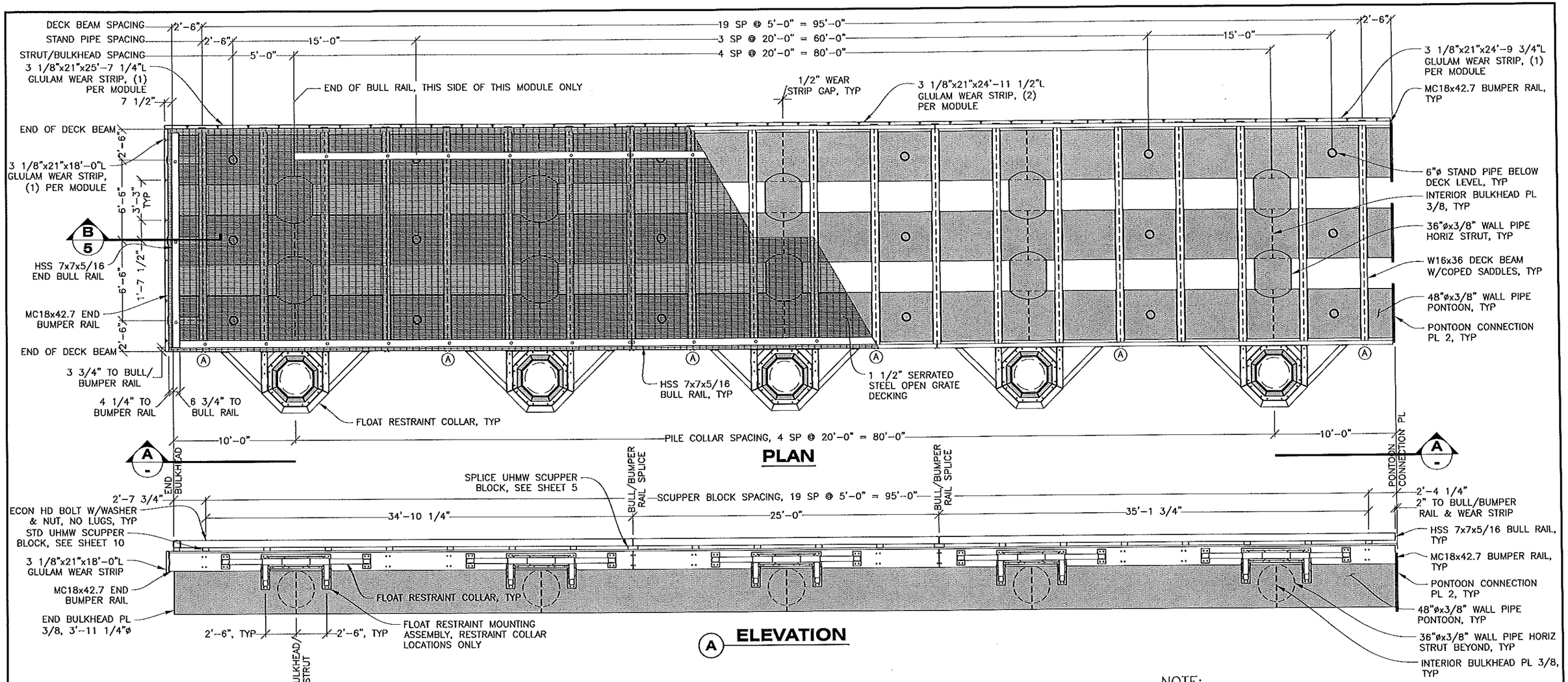

NOTE:

1. (2) FLOAT MODULES REQUIRED. (1) AS SHOWN AND (1) OPPOSITE HAND.
2. CONTRACTOR TO PROVIDE LIFT & ERECTION DETAILS TO BE APPROVED BY ENGINEER.
3. PONTOON SPLICES TO BE LIMITED TO (2) PER MODULE.
4. INSTALL GRATING PANEL, ACCORDING TO TYPICAL DETAILS, ACROSS FLOAT SPLICE ONCE BOTH FLOAT MODULES HAVE BEEN CONNECTED.
5. (A) = ALUMINUM ANODE LOCATION
6. TYPE A – 3' WIDE PANEL, SECURED W/THRU BOLTS
   TYPE B – 2' WIDE PANEL, SECURED W/STUDS

DO NOT SCALE FROM THESE DRAWINGS USE DIMENSIONS

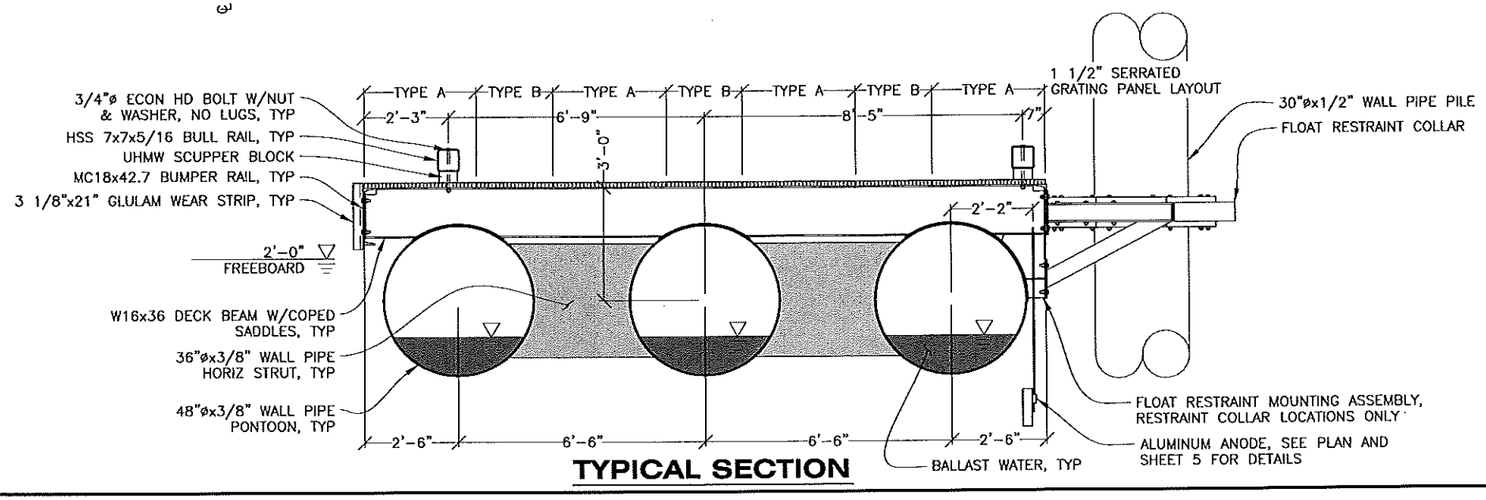

CHECKED BY: K. MILLER

STATE OF ALASKA 49th David H. Lowell CE-12614 REGISTERED PROFESSIONAL ENGINEER

DESIGNED BY: D. LOWELL
DRAWN BY: D. LOWELL

STATE OF ALASKA
DEPARTMENT OF TRANSPORTATION & PUBLIC FACILITIES
SOUTHEAST REGION

GUSTAVUS PUBLIC DOCK AND FLOATS
PROJECT #69909

18'x100' STEEL MOORING FLOAT

PATH: O:\GUS\68343\MF\PLANSET\FINAL SET\04-18'X100' STEEL MOORING FLOAT.DWG
TAB: 04 Friday, March 18, 2011 11:20:48 AM LOWELL, DAVID H (DOT)

REVISIONS			PROJECT DESIGNATION	YEAR	SHEET NO.	TOTAL SHEETS
NO.	DATE	DESCRIPTION	69909/DC01158-00	2011	04	15

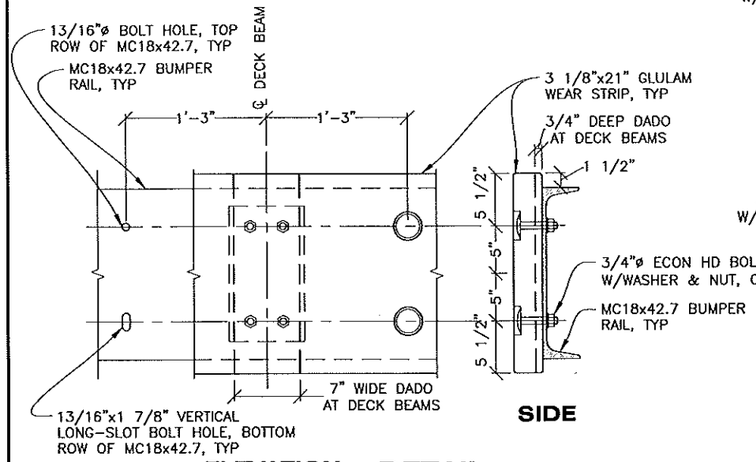

DETAIL
WEAR STRIP

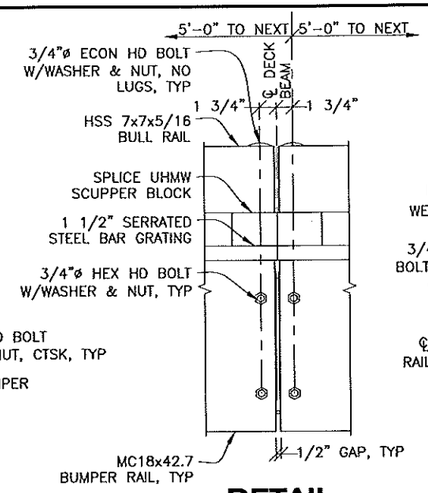

DETAIL
BULL/BUMPER RAIL

SPLICE LOCATION SHOWN, SAME DETAIL & LAYOUT FOR NON-SPLICE LOCATIONS

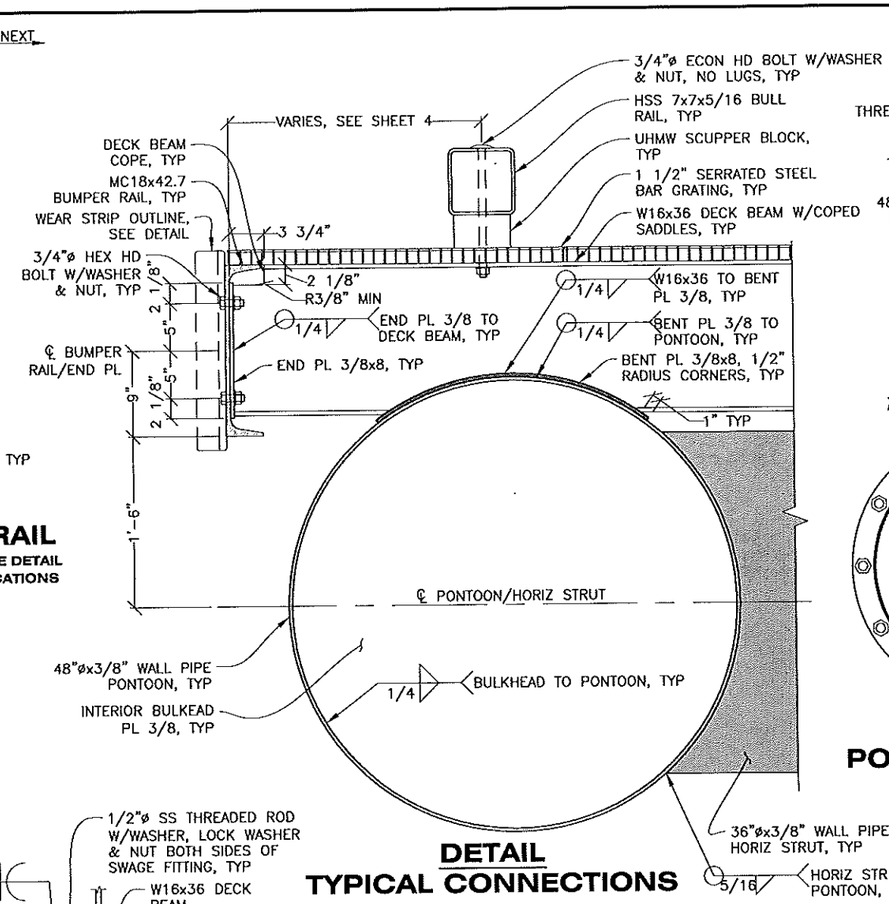

DETAIL
TYPICAL CONNECTIONS

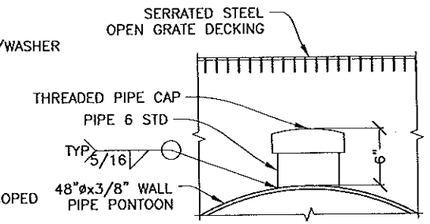

DETAIL
STAND PIPE

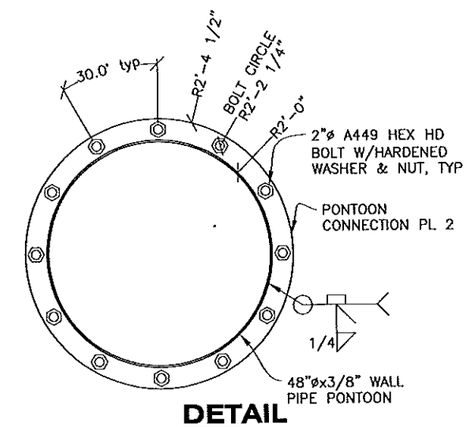

DETAIL
PONTOON CONNECTION PL

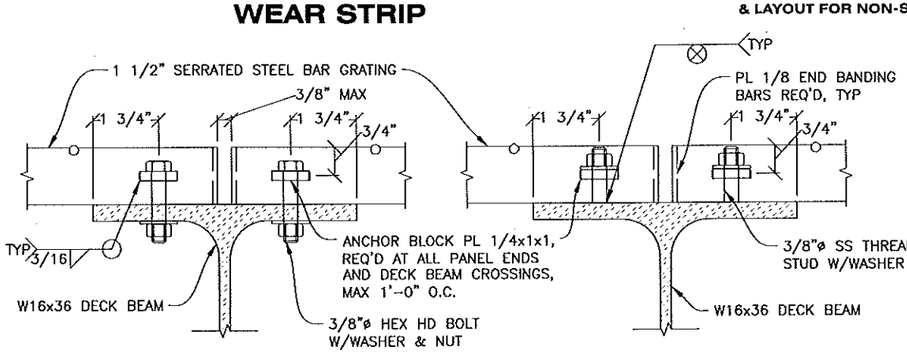

DETAIL
GRATING CONNECTION

END PANEL DETAIL SHOWN, WHERE GRATING IS CONTINUOUS OVER DECK BEAM, ONLY (1) FASTENER REQUIRED

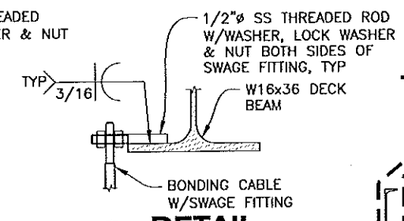

DETAIL
1

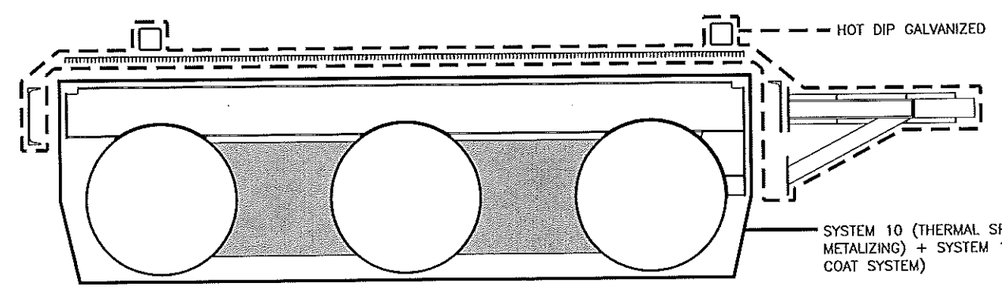

COATING DIAGRAM

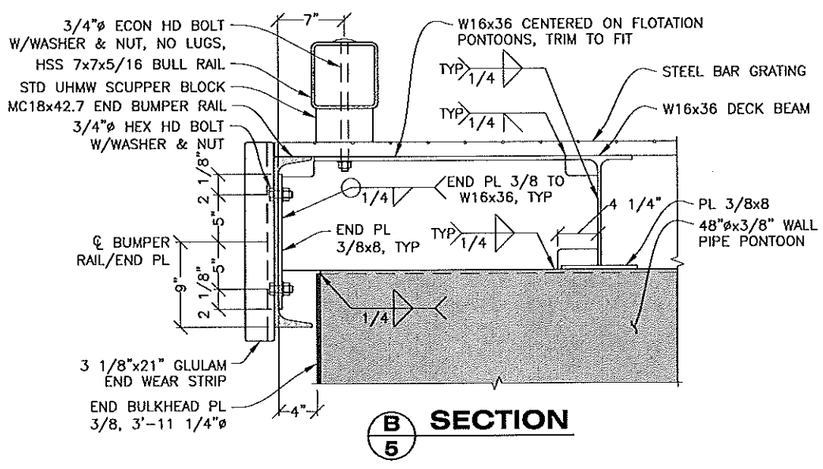

B/5 SECTION

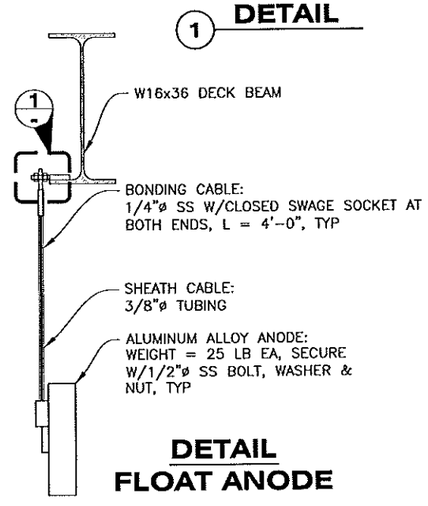

DETAIL
FLOAT ANODE

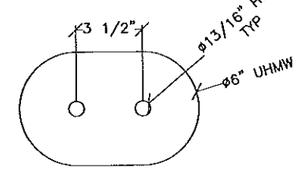

DETAIL
SPLICE SCUPPER BLOCK

THICKNESS = 3 1/2"

DO NOT SCALE FROM THESE DRAWINGS USE DIMENSIONS

CHECKED BY: K. MILLER

STATE OF ALASKA 49th David H. Lowell CE-12614 REGISTERED PROFESSIONAL ENGINEER

DESIGNED BY: D. LOWELL
DRAWN BY: D. LOWELL

STATE OF ALASKA
DEPARTMENT OF TRANSPORTATION & PUBLIC FACILITIES
SOUTHEAST REGION

GUSTAVUS PUBLIC DOCK AND FLOATS
PROJECT #69909
18'x100' STEEL MOORING FLOAT DETAILS I

PATH: Q:\GUS\68343\MF\PLANSET\FINAL SET\05 - 18'X100' STEEL MOORING FLOAT DETAILS I.DWG
TAB: 05 Friday, March 18, 2011 11:20:58 AM LOWELL, DAVID H (DOT)

REVISIONS			PROJECT DESIGNATION	YEAR	SHEET NO.	TOTAL SHEETS
NO.	DATE	DESCRIPTION	69909/DC01158-00	2011	05	15

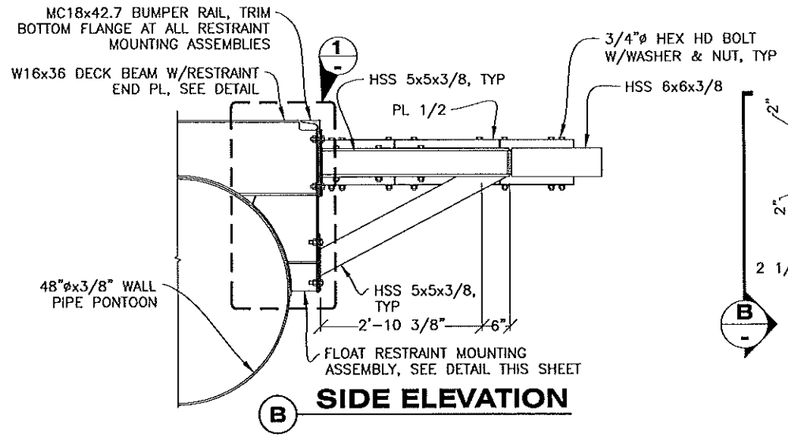

B SIDE ELEVATION

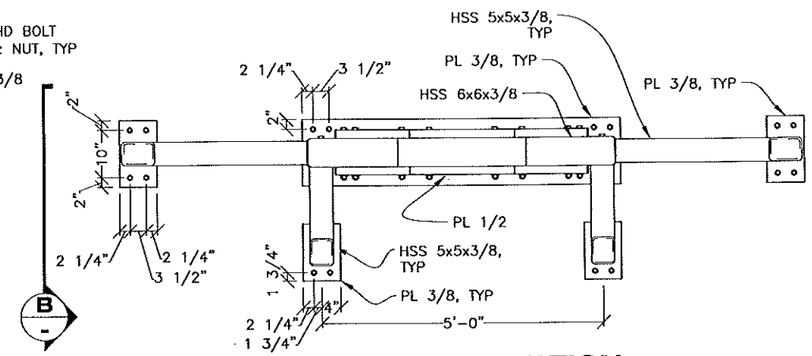

FRONT ELEVATION
PILE COLLAR

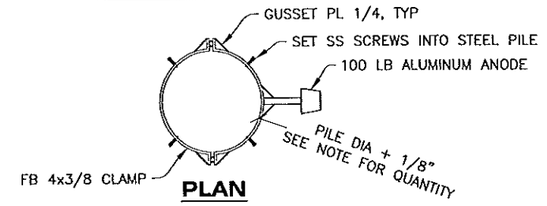

PLAN

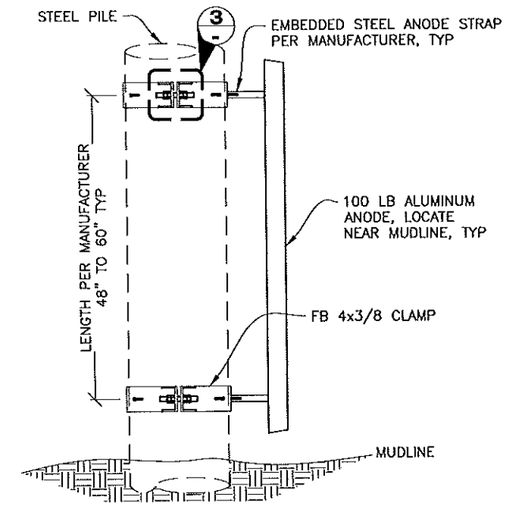

ELEVATION
PILE ANODE

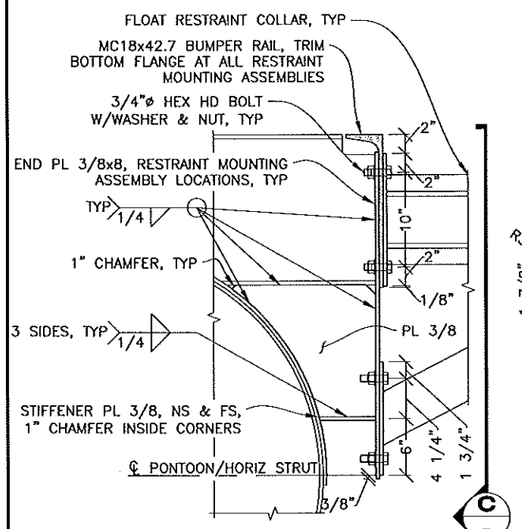

1 DETAIL

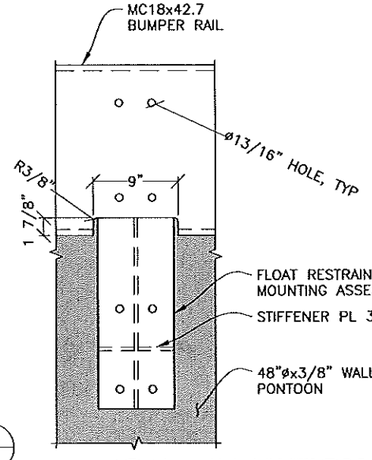

C FRONT ELEVATION

FLOAT RESTRAINT COLLAR NOT SHOWN FOR CLARITY

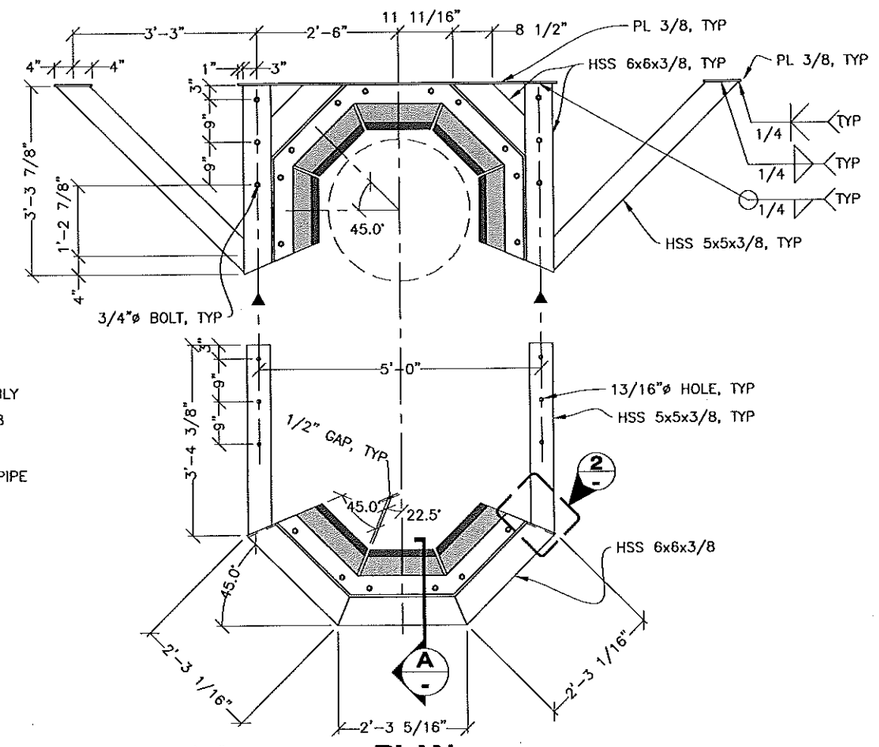

PLAN
PILE COLLAR

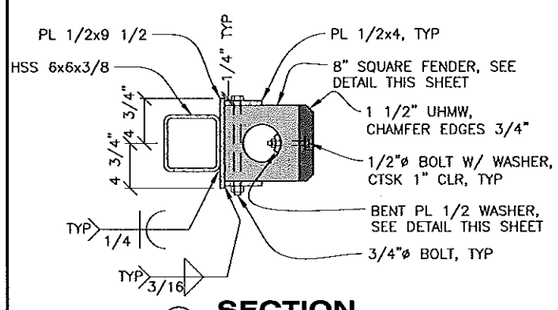

A SECTION

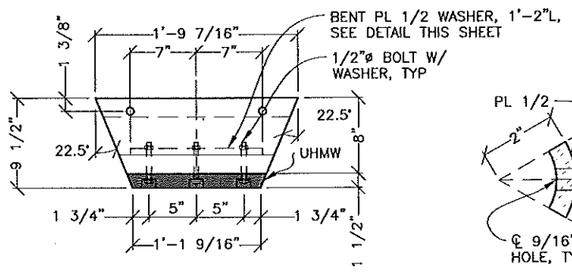

PLAN
FENDER

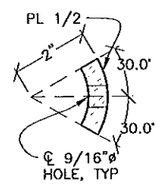

DETAIL
BENT PL WASHER

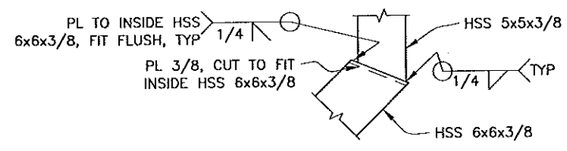

2 DETAIL

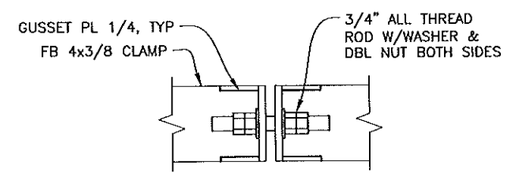

3 DETAIL

NOTE:

1. ANODES MAY BE WELDED UNDERWATER TO PILE IN LIEU OF USING ANODE BRACELET.
2. (10) REQ'D FOR 30"ø STEEL PILES
3. (4) REQ'D FOR 16"ø STEEL PILES
4. (2) REQ'D FOR 12 3/4"ø STEEL PILES

DO NOT SCALE FROM THESE DRAWINGS USE DIMENSIONS

CHECKED BY: K. MILLER

STATE OF ALASKA 49th David H. Lowell CE-12614 REGISTERED PROFESSIONAL ENGINEER

DESIGNED BY: D. LOWELL
DRAWN BY: D. LOWELL

STATE OF ALASKA
DEPARTMENT OF TRANSPORTATION & PUBLIC FACILITIES
SOUTHEAST REGION

GUSTAVUS PUBLIC DOCK AND FLOATS PROJECT #69909
18'x100' STEEL MOORING FLOAT DETAILS II

PATH: Q:\GUS\68343\MF\PLANSET\FINAL SET\06 - 18'x100' STEEL MOORING FLOAT DETAILS II.DWG
TAB: 06 Friday, March 18, 2011 11:21:07 AM LOWELL, DAVID H (DOT)

REVISIONS			PROJECT DESIGNATION	YEAR	SHEET NO.	TOTAL SHEETS
NO.	DATE	DESCRIPTION	69909/DC01158-00	2011	06	15

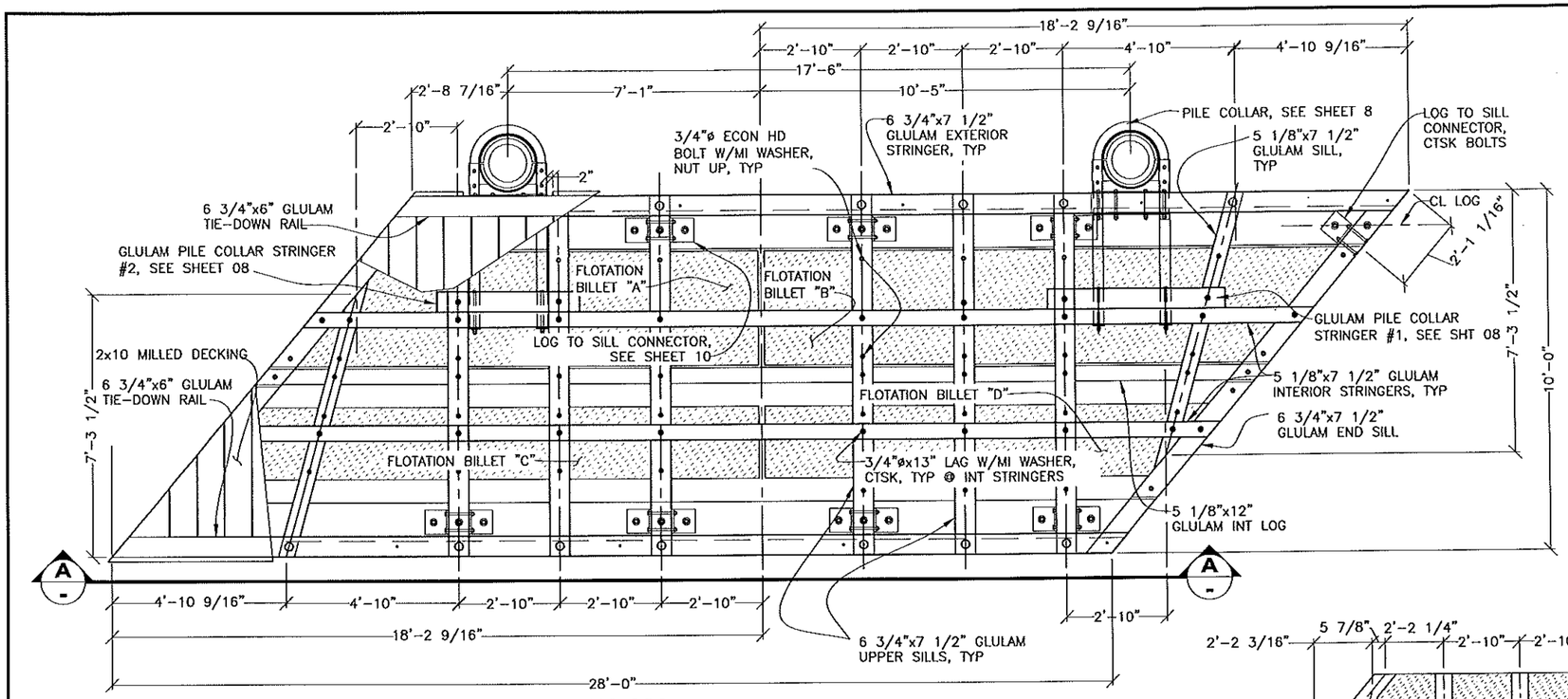

PLAN

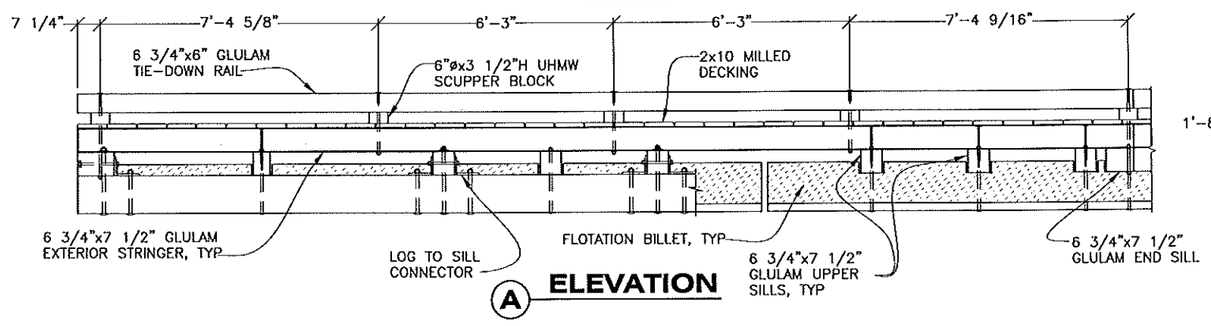

A ELEVATION

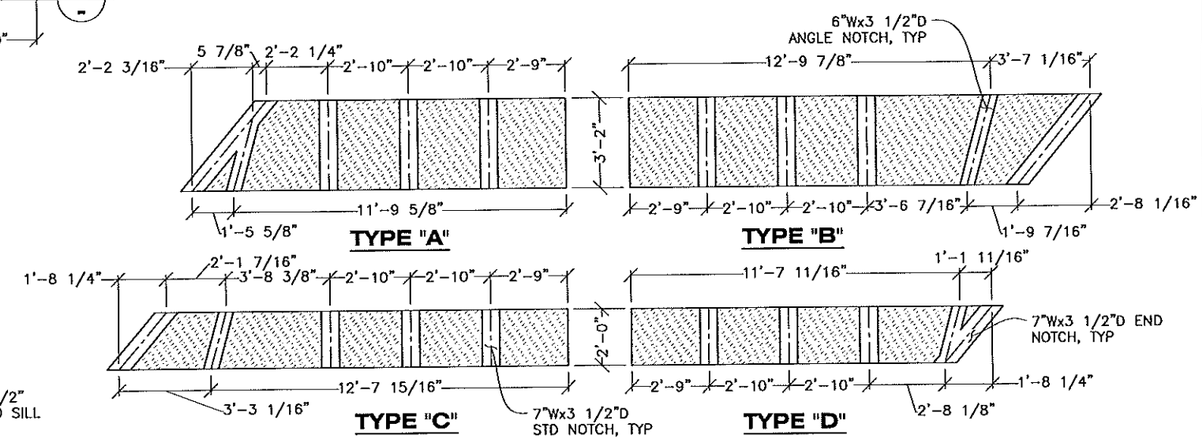

FLOTATION BILLETS

BILLET THICKNESS = 1'-1"

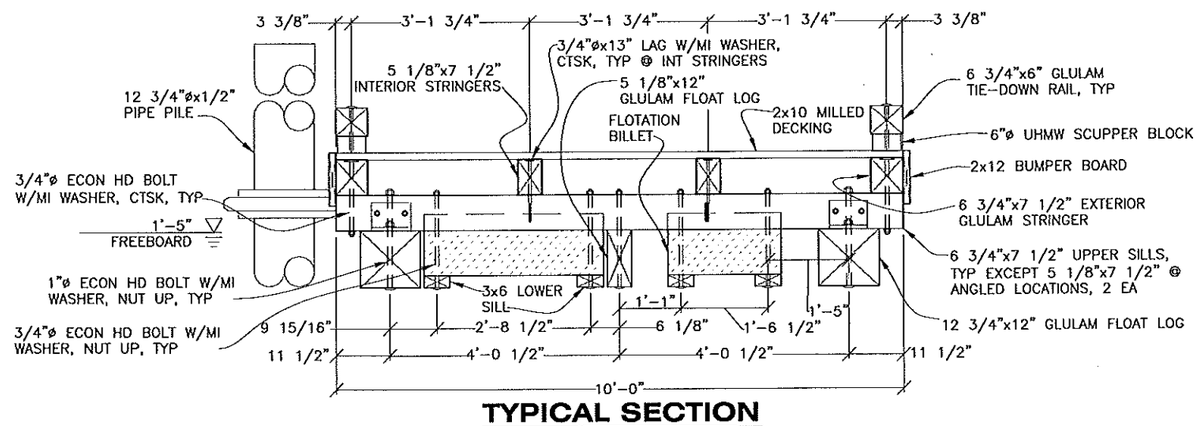

TYPICAL SECTION

DO NOT SCALE FROM THESE DRAWINGS USE DIMENSIONS

CHECKED BY: K. MILLER

STATE OF ALASKA 49th David H. Lowell CE-12614 REGISTERED PROFESSIONAL ENGINEER

DESIGNED BY: D. LOWELL

DRAWN BY: D. LOWELL

STATE OF ALASKA
DEPARTMENT OF TRANSPORTATION & PUBLIC FACILITIES
SOUTHEAST REGION

GUSTAVUS PUBLIC DOCK AND FLOATS PROJECT #69909

10'x28' TIMBER ACCESS FLOAT

PATH: O:\GUS\68343\WF\PLANSET\FINAL SET\07 - 10'X28' TIMBER ACCESS FLOAT.DWG
TAB: 07 Friday, March 18, 2011 11:21:12 AM LOWELL, DAVID H (DOT)

REVISIONS			PROJECT DESIGNATION	YEAR	SHEET NO.	TOTAL SHEETS
NO.	DATE	DESCRIPTION	69909/DC01158-00	2011	07	15

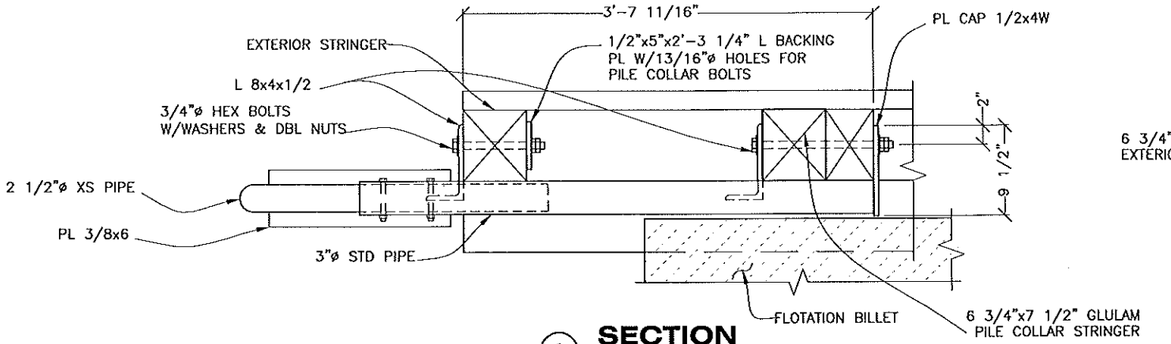

(A) SECTION

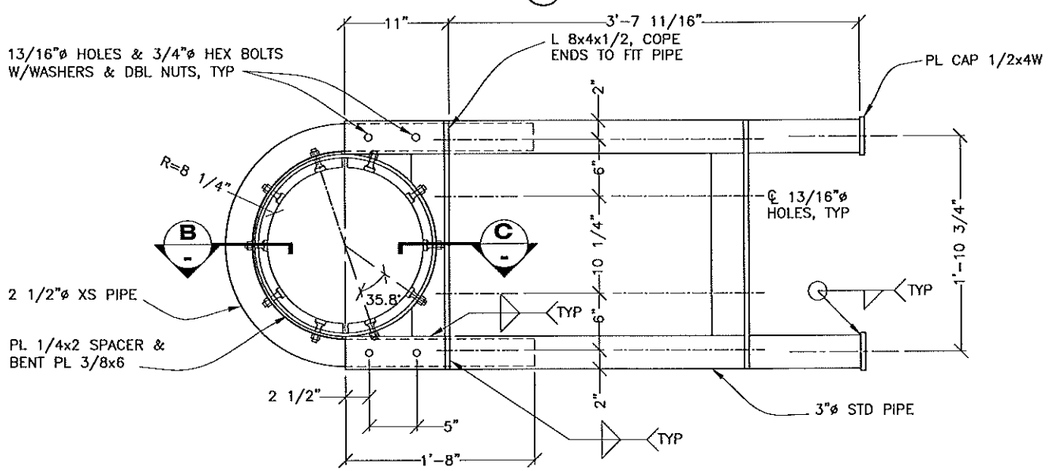

DETAIL
EXTERIOR PILE COLLAR

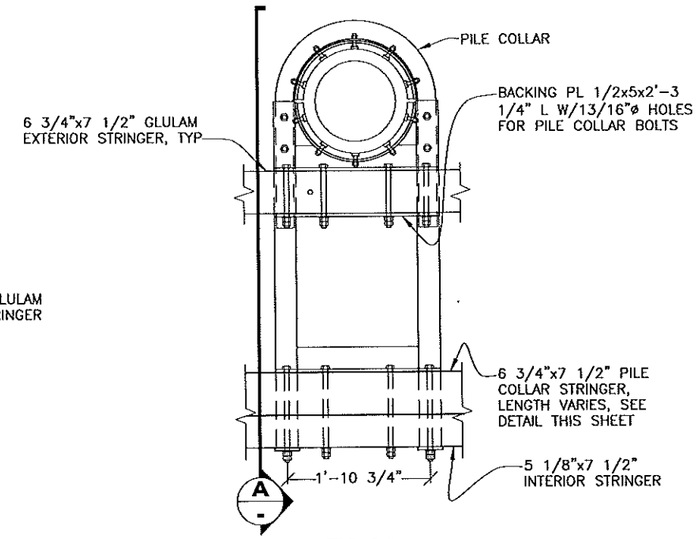

PLAN
PILE COLLAR

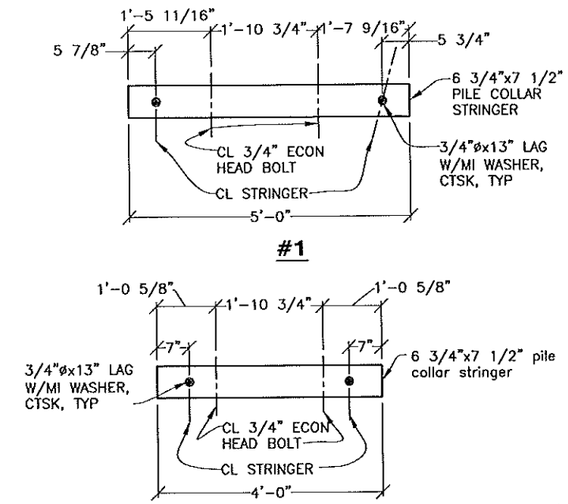

DETAIL
PILE COLLAR STRINGER

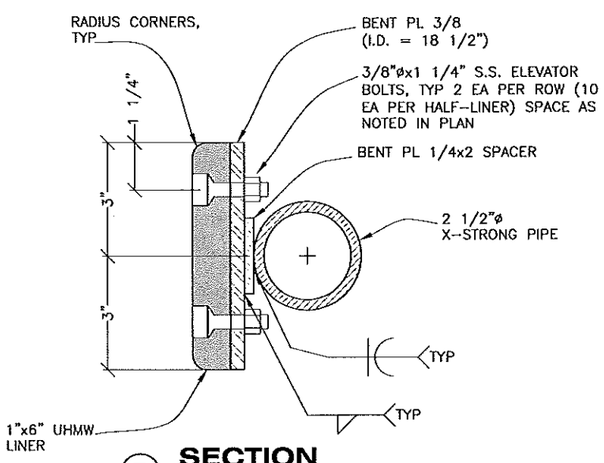

(B) SECTION

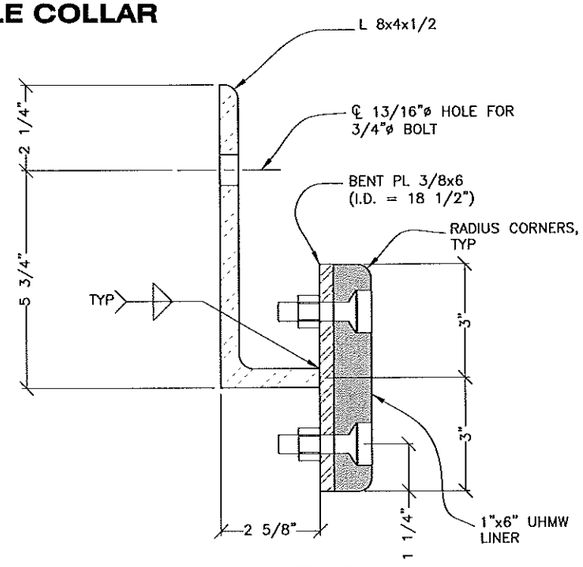

(C) SECTION

NOTE:
1. SEE SHEET 10 FOR LOG TO SILL CONNECTOR, DECKING, AND SCUPPER BLOCK DETAILS

DO NOT SCALE FROM THESE DRAWINGS USE DIMENSIONS

CHECKED BY: K. MILLER

STATE OF ALASKA 49th David H. Lowell CE-12614 REGISTERED PROFESSIONAL ENGINEER

DESIGNED BY: D. LOWELL
DRAWN BY: D. LOWELL

STATE OF ALASKA
DEPARTMENT OF TRANSPORTATION & PUBLIC FACILITIES
SOUTHEAST REGION

GUSTAVUS PUBLIC DOCK AND FLOATS
PROJECT #69909
10'x28' TIMBER ACCESS FLOAT DETAILS I

PATH: O:\GUS\68343\MF\PLANSET\FINAL SET\08 - 10'X28' TIMBER ACCESS FLOAT DETAILS I.DWG
TAB: 08 Friday, March 18, 2011 11:21:21 AM LOWELL, DAVID H (DOT)

REVISIONS			PROJECT DESIGNATION	YEAR	SHEET NO.	TOTAL SHEETS
NO.	DATE	DESCRIPTION				
			69909/DC01158-00	2011	08	15

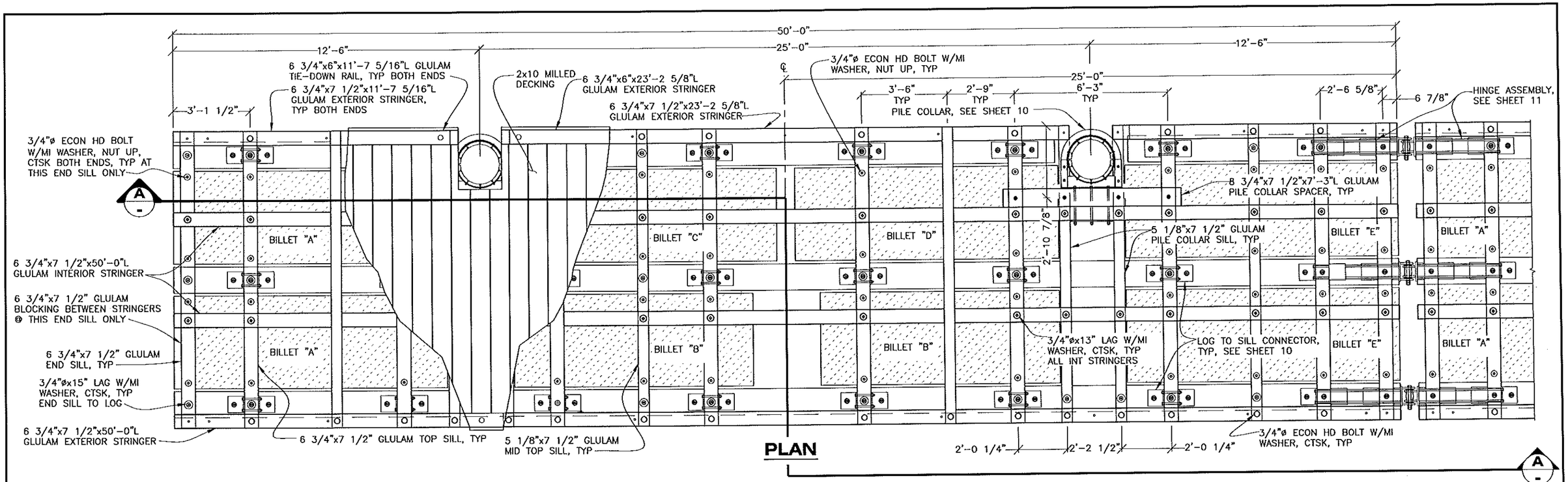

PLAN

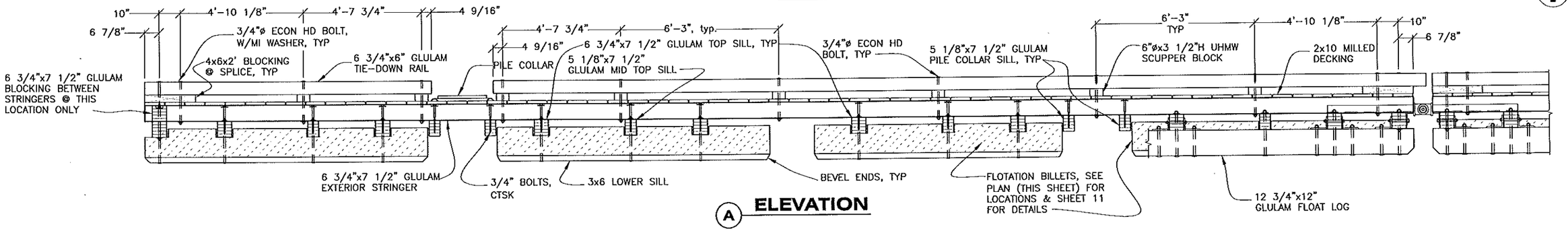

(A) ELEVATION

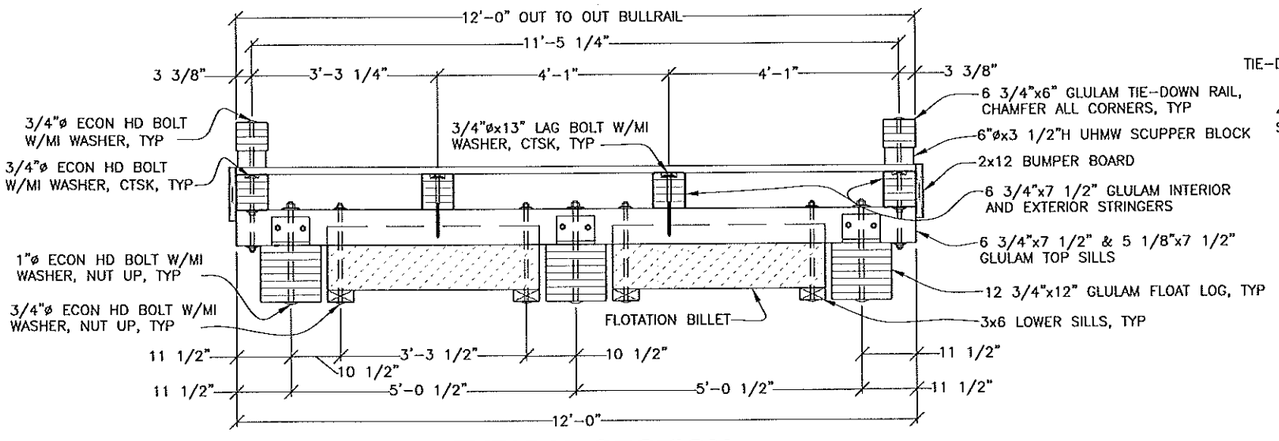

TYPICAL SECTION

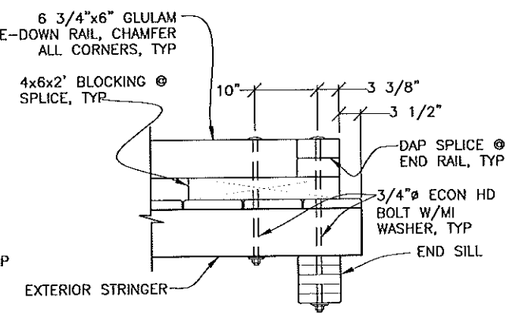

END FLOAT TIE-DOWN RAIL DAP SPLICE

NOTE:

1. END FLOAT SIMILAR EXCEPT OMIT TRANSITION PL AND BLOCKING, ADD TIE-DOWN RAIL ACROSS END, SEE DETAIL THIS SHEET

DO NOT SCALE FROM THESE DRAWINGS USE DIMENSIONS

CHECKED BY: K. MILLER

STATE OF ALASKA 49th David H. Lowell CE-12614 REGISTERED PROFESSIONAL ENGINEER

DESIGNED BY: D. LOWELL
DRAWN BY: D. LOWELL

STATE OF ALASKA
DEPARTMENT OF TRANSPORTATION & PUBLIC FACILITIES
SOUTHEAST REGION

GUSTAVUS PUBLIC DOCK AND FLOATS
PROJECT #69909

12'x50' TIMBER MOORING FLOAT

PATH: O:\GUS\68343\MF\PLANSET\FINAL SET\09 - 12'X50' TIMBER MOORING FLOAT.DWG
TAB: 09 Friday, March 18, 2011 11:21:27 AM LOWELL, DAVID H (DOT)

REVISIONS			PROJECT DESIGNATION	YEAR	SHEET NO.	TOTAL SHEETS
NO.	DATE	DESCRIPTION	69909/DC01158-00	2011	09	15

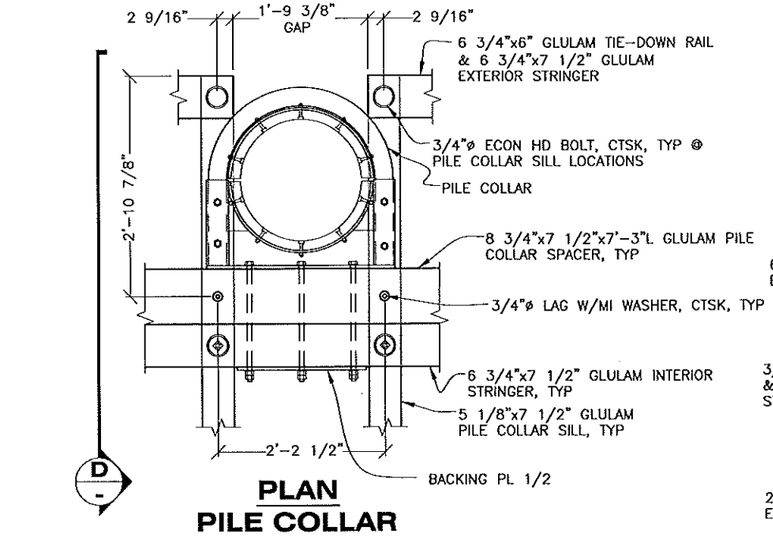

PLAN
PILE COLLAR

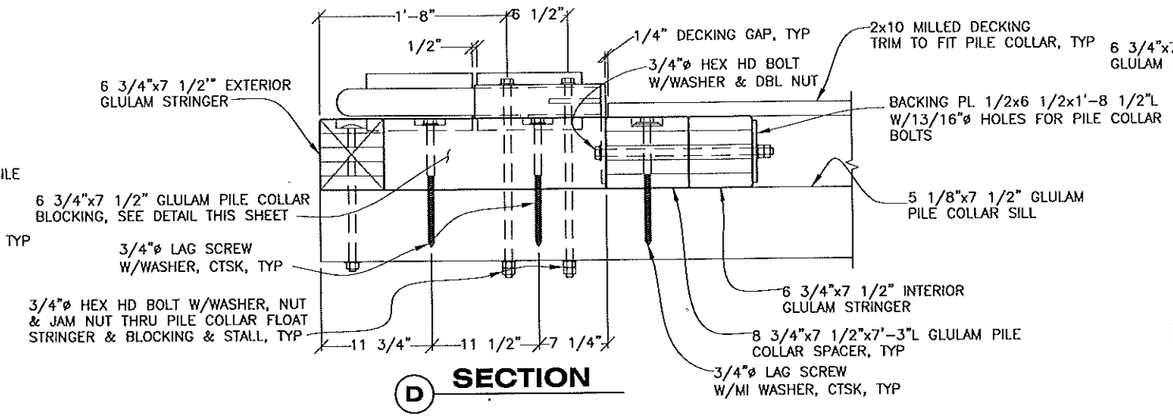

D SECTION

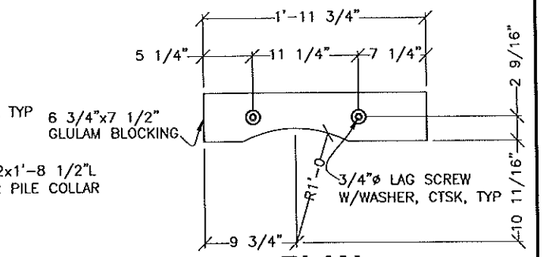

PLAN
PILE COLLAR BLOCKING

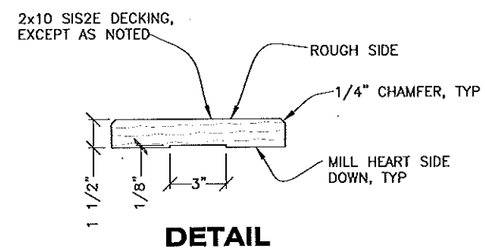

DETAIL
MILLED DECKING

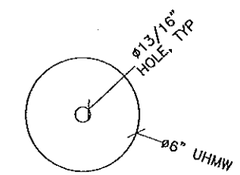

DETAIL
UHMW SCUPPER BLOCK
THICKNESS = 3 1/2"

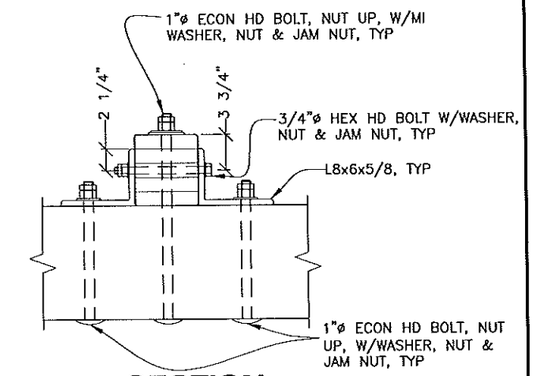

E SECTION

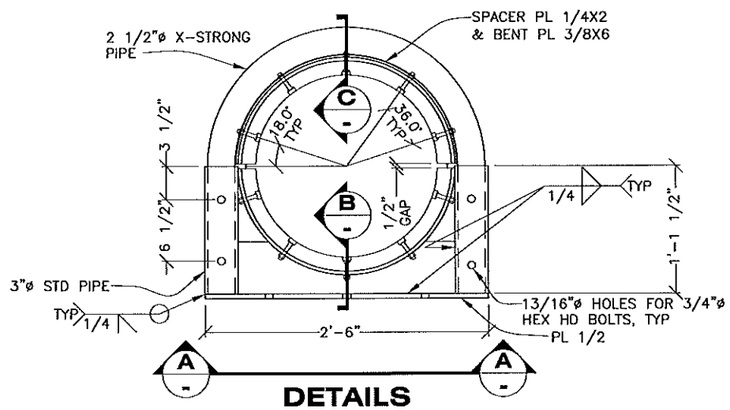

DETAILS
PILE COLLAR

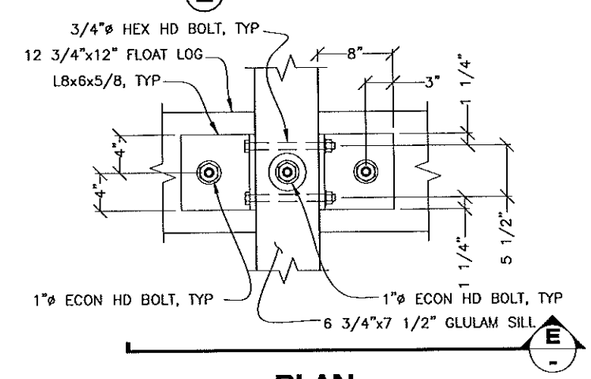

PLAN
LOG TO SILL CONNECTOR

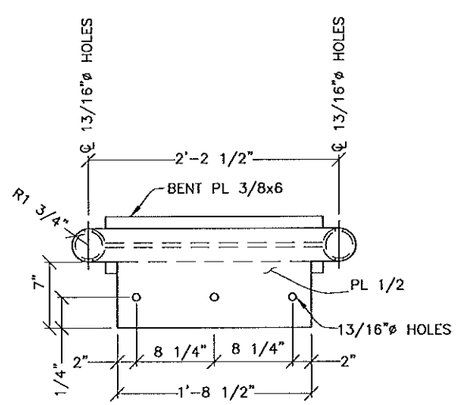

A ELEVATION

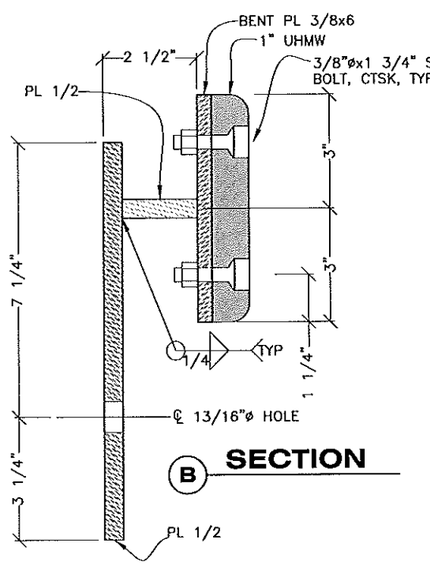

B SECTION

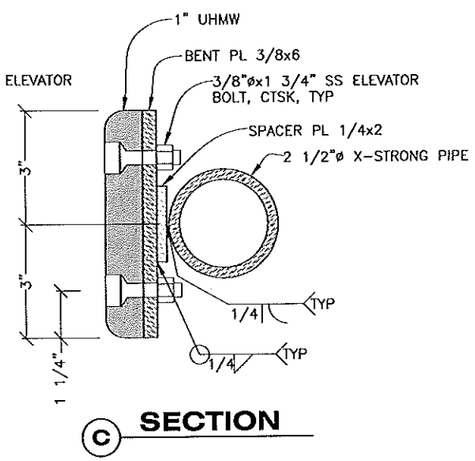

C SECTION

DO NOT SCALE FROM THESE DRAWINGS USE DIMENSIONS

CHECKED BY: K. MILLER

STATE OF ALASKA 49th David H. Lowell CE-12614 REGISTERED PROFESSIONAL ENGINEER

STATE OF ALASKA
DEPARTMENT OF TRANSPORTATION & PUBLIC FACILITIES
SOUTHEAST REGION

GUSTAVUS PUBLIC DOCK AND FLOATS
PROJECT #69909
12'x50' TIMBER MOORING FLOAT DETAILS I

DESIGNED BY: D. LOWELL
DRAWN BY: D. LOWELL

PATH: Q:\GUS\68343\MF\PLANSET\FINAL SET\10 - 12'X50' TIMBER MOORING FLOAT DETAILS I.DWG
TAB: 10 Friday, March 18, 2011 11:21:37 AM LOWELL, DAVID H (DOT)

REVISIONS			PROJECT DESIGNATION	YEAR	SHEET NO.	TOTAL SHEETS
NO.	DATE	DESCRIPTION	69909/DC01158-00	2011	10	15

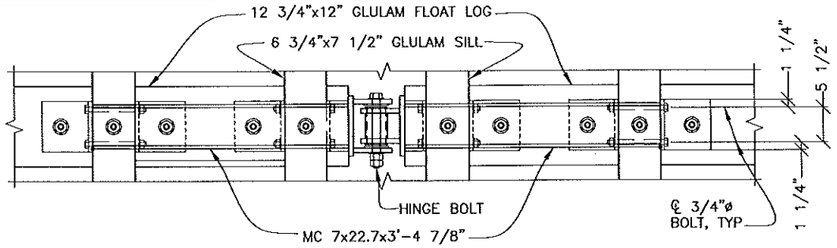

PLAN

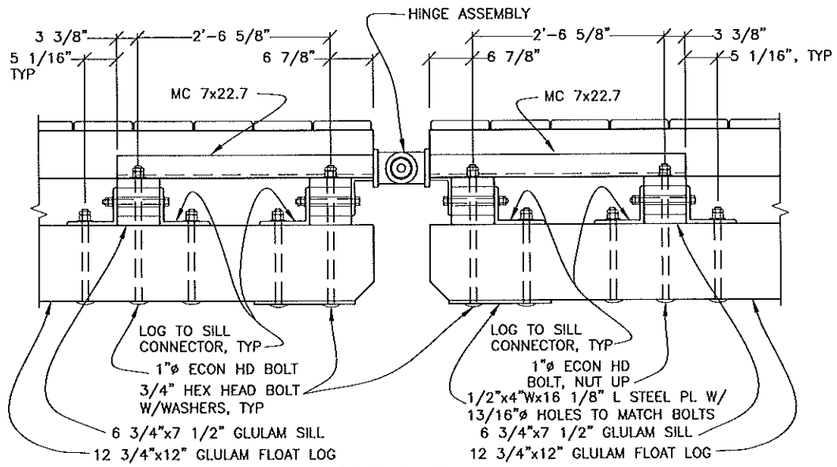

ELEVATION

HINGE ASSEMBLY

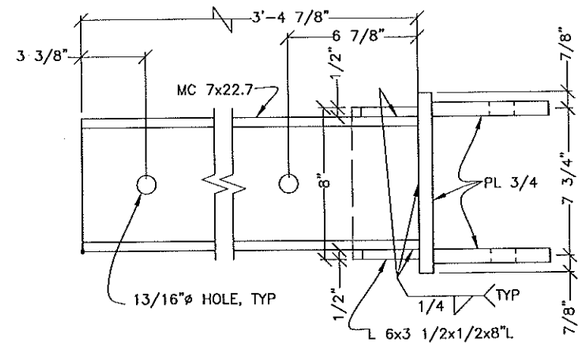

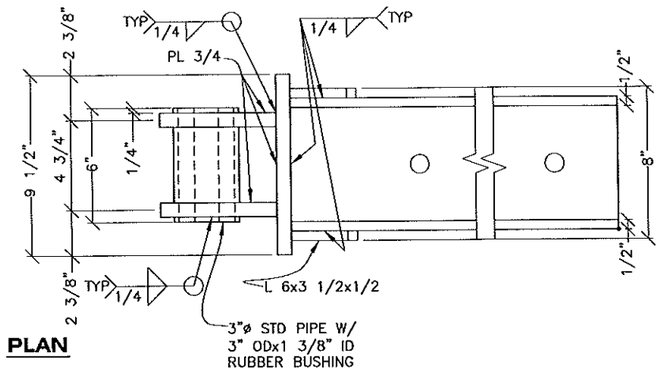

PLAN

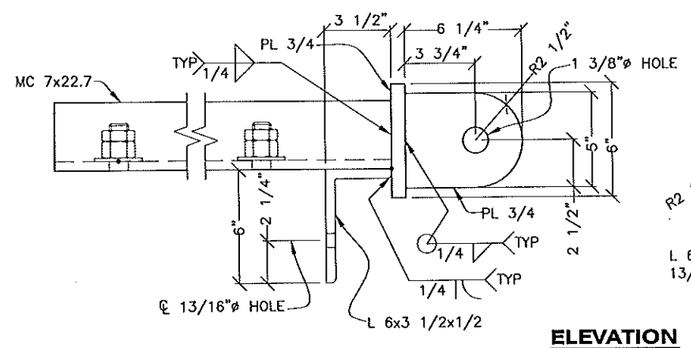

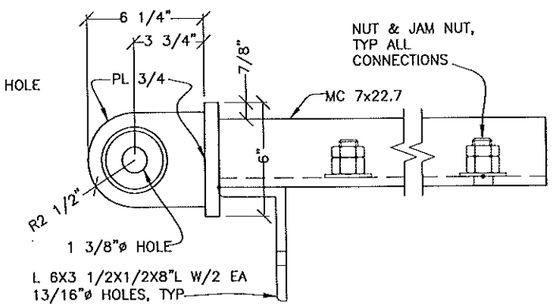

ELEVATION

HINGE ASSEMBLY DETAILS

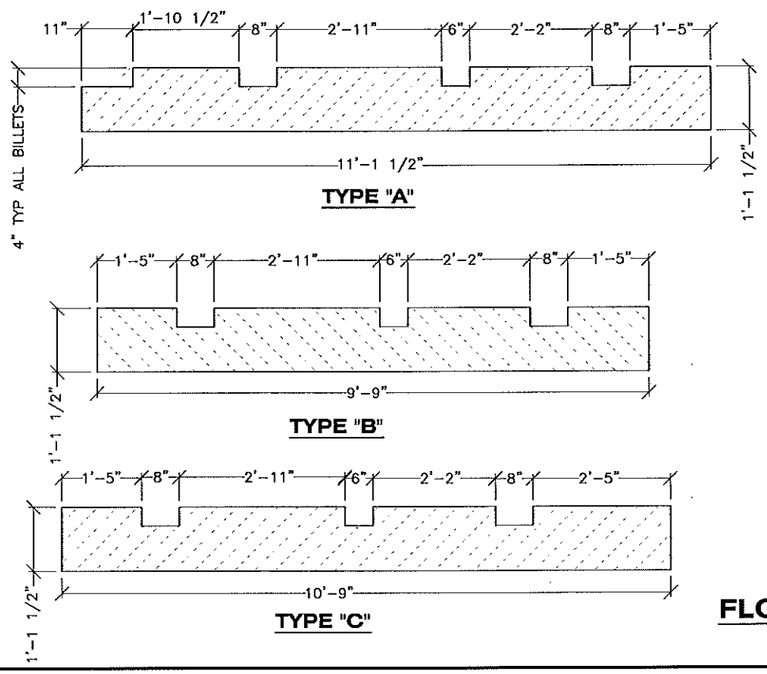

TYPE "A"

TYPE "B"

TYPE "C"

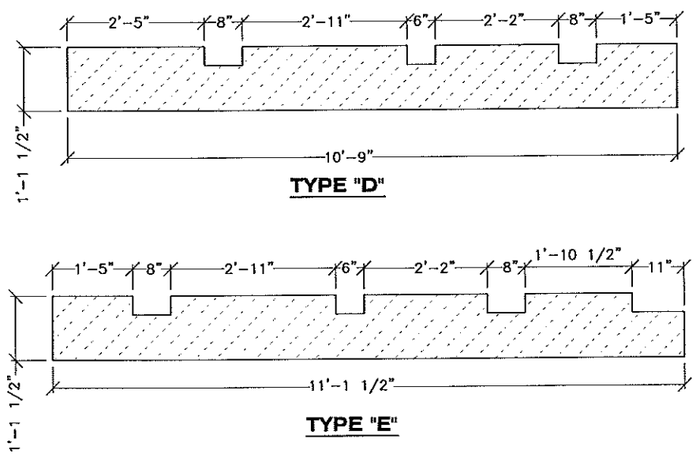

TYPE "D"

TYPE "E"

FLOTATION BILLETS

BILLET WIDTH = 3'-9"

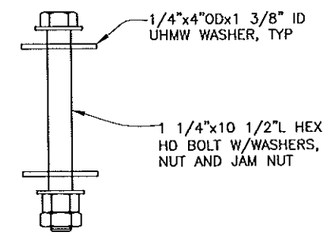

HINGE BOLT

DO NOT SCALE FROM THESE DRAWINGS USE DIMENSIONS

CHECKED BY: K. MILLER

STATE OF ALASKA 49th David H. Lowell CE-12614 REGISTERED PROFESSIONAL ENGINEER

DESIGNED BY: D. LOWELL
DRAWN BY: D. LOWELL

STATE OF ALASKA
DEPARTMENT OF TRANSPORTATION
& PUBLIC FACILITIES
SOUTHEAST REGION

GUSTAVUS PUBLIC DOCK AND FLOATS PROJECT #69909
12'x50' TIMBER MOORING FLOAT DETAILS II

PATH: Q:\GUS\68343\WF\PLANSET\FINAL SET\11 – 12'x50' TIMBER MOORING FLOAT DETAILS II.DWG
TAB: 11 Friday, March 18, 2011 11:21:42 AM LOWELL, DAVID H (DOT)

REVISIONS			PROJECT DESIGNATION	YEAR	SHEET NO.	TOTAL SHEETS
NO.	DATE	DESCRIPTION	69909/DC01158-00	2011	11	15

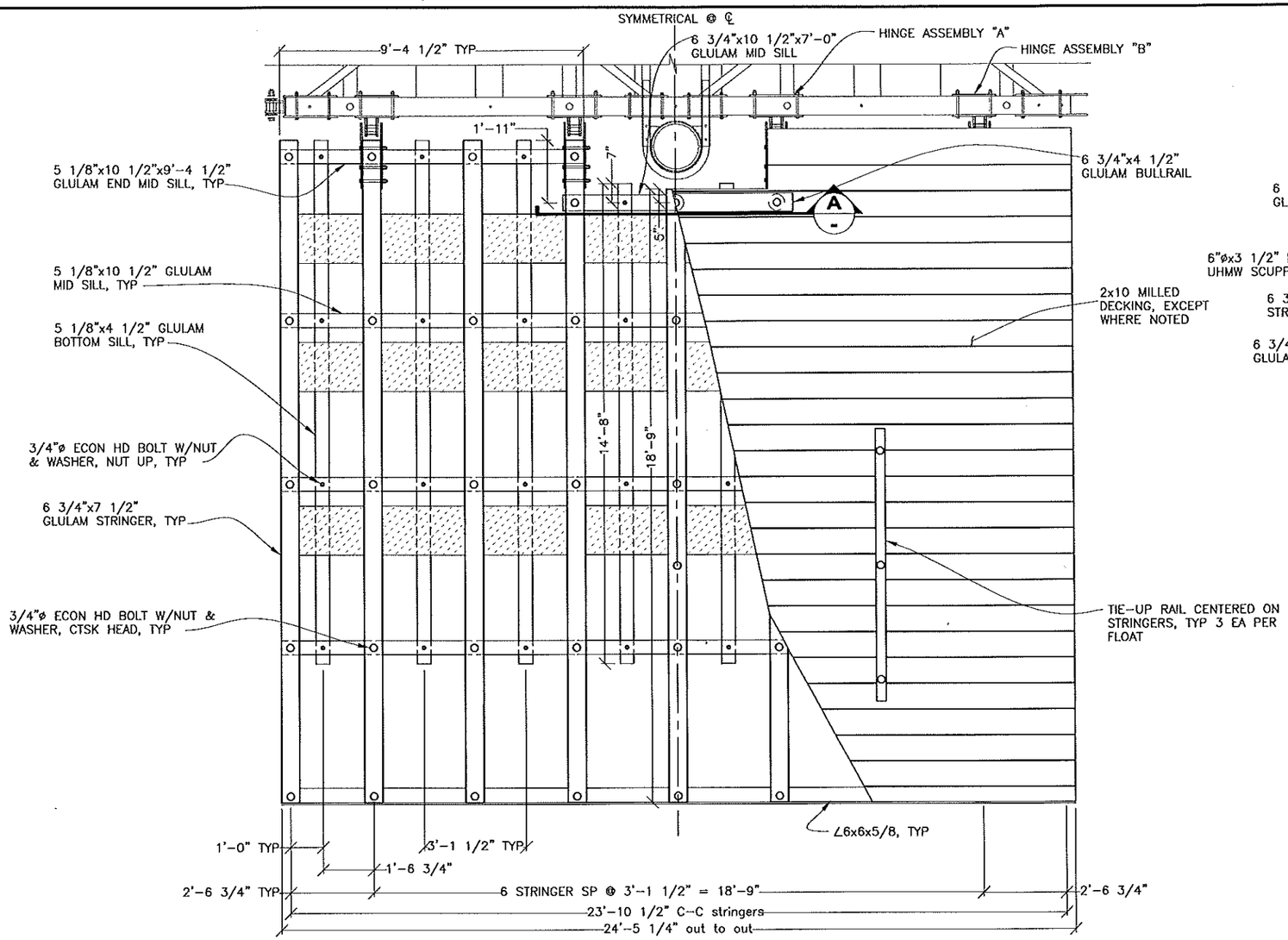

PLAN

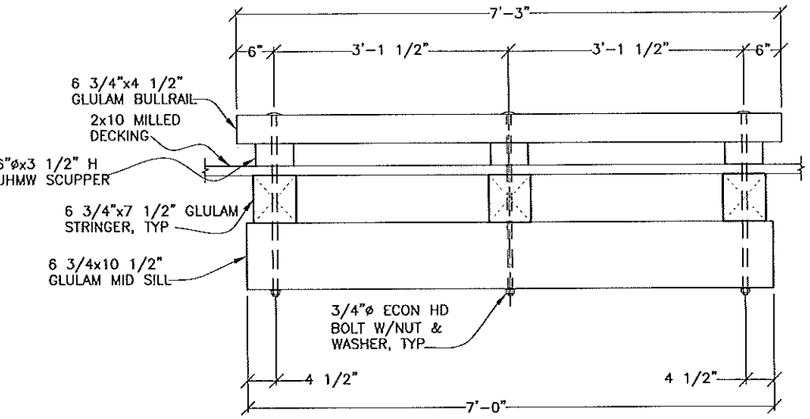

A SECTION

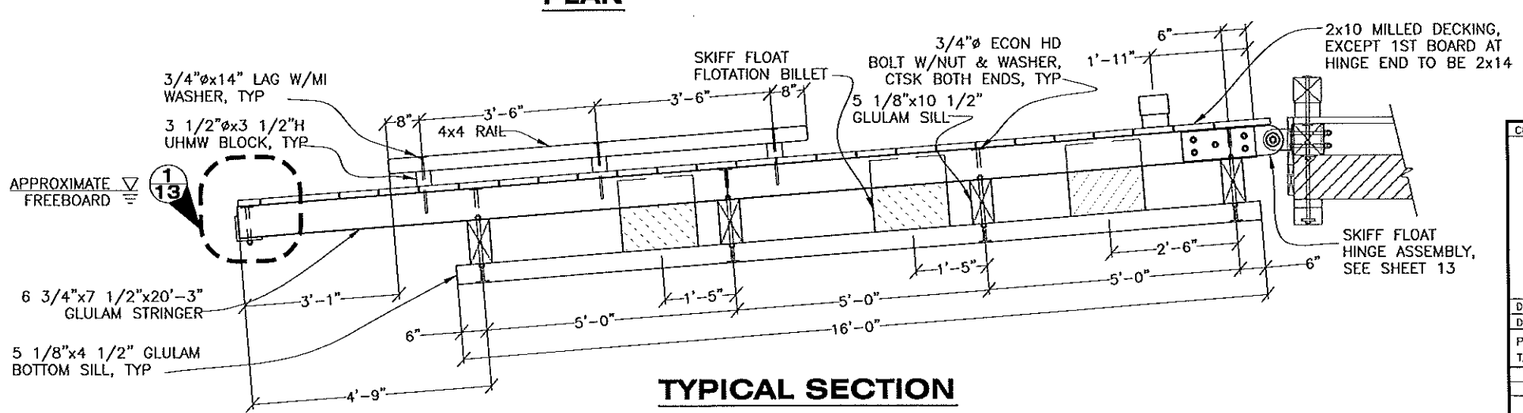

TYPICAL SECTION

DO NOT SCALE FROM THESE DRAWINGS USE DIMENSIONS

CHECKED BY: K. MILLER

STATE OF ALASKA 49th David H. Lowell CE-12614 REGISTERED PROFESSIONAL ENGINEER

DESIGNED BY: D. LOWELL
DRAWN BY: D. LOWELL

STATE OF ALASKA
DEPARTMENT OF TRANSPORTATION
& PUBLIC FACILITIES
SOUTHEAST REGION

GUSTAVUS PUBLIC DOCK AND FLOATS
PROJECT #69909

25' x 20' SKIFF FLOAT

PATH: Q:\GUS\68343\WF\PLANSET\FINAL SET\12 - SKIFF FLOAT.DWG
TAB: 12 Friday, March 18, 2011 11:21:47 AM LOWELL, DAVID H (DOT)

REVISIONS			PROJECT DESIGNATION	YEAR	SHEET NO.	TOTAL SHEETS
NO.	DATE	DESCRIPTION				
			69909/DC01158-00	2011	12	15

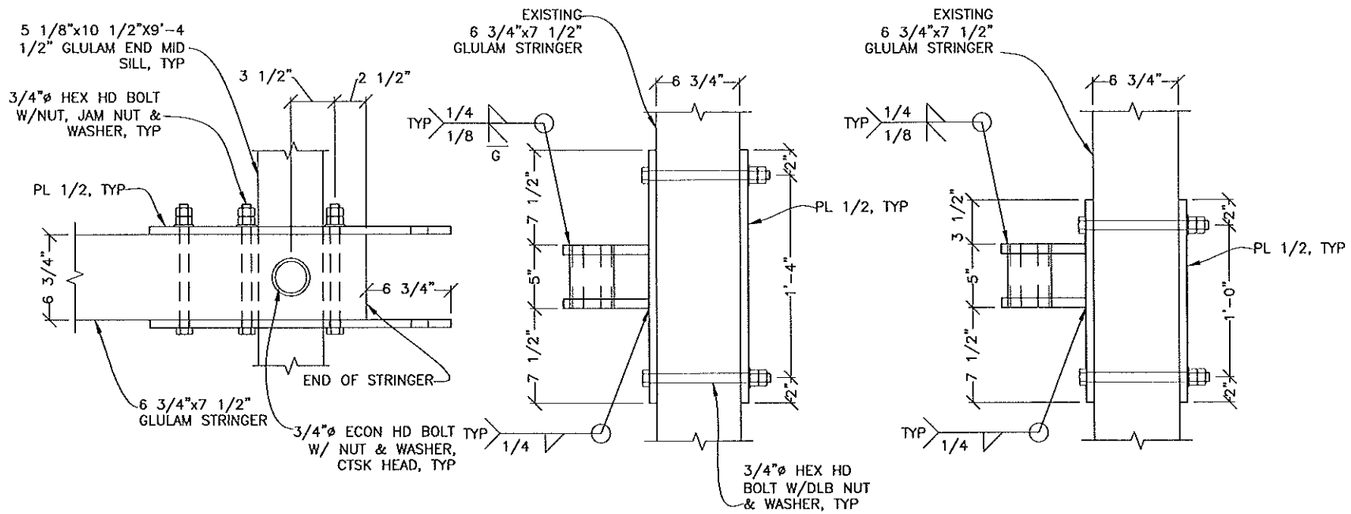

PLAN

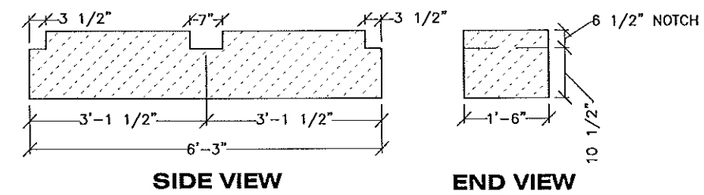

SIDE VIEW **END VIEW**

TYPICAL SKIFF FLOTATION BILLETS

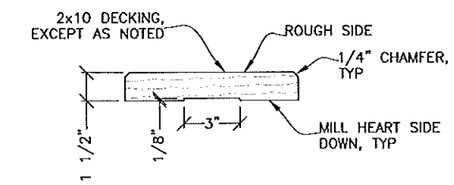

DETAIL
MILLED DECKING

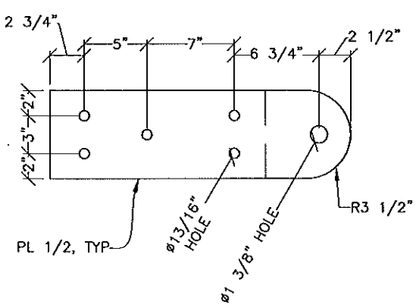

SKIFF FLOAT HINGE ASSEMBLY
4 REQ'D PER FLOAT

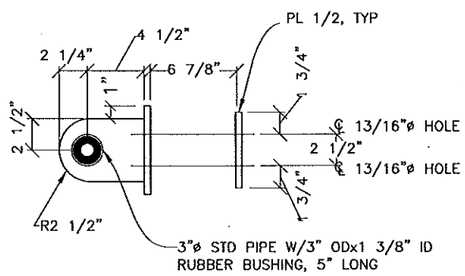

ELEVATION
***STRINGER NOT SHOWN**

EXISTING FLOAT HINGE ASSEMBLY "A"
2 REQ'D PER FLOAT

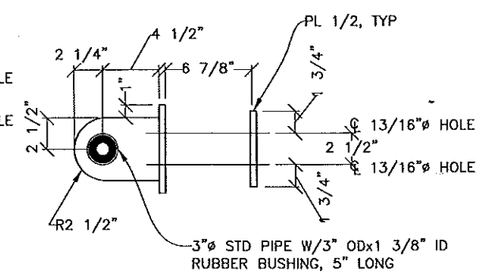

EXISTING FLOAT HINGE ASSEMBLY "B"
2 REQ'D PER FLOAT

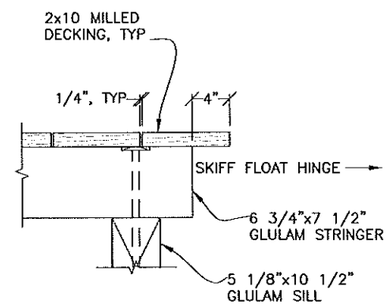

DETAIL
SKIFF FLOAT DECKING LAYOUT

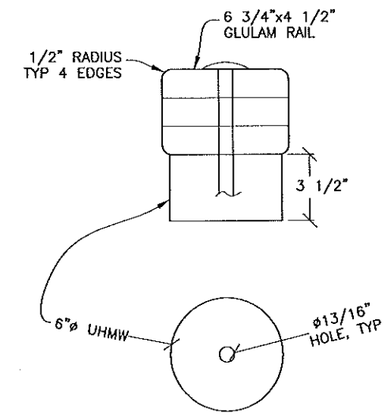

DETAIL
TIE DOWN RAIL

SKIFF FLOAT TO EXISTING FLOAT HINGE ASSEMBLIES

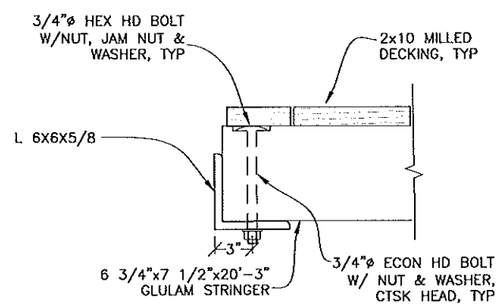

1/13 DETAIL

DO NOT SCALE FROM THESE DRAWINGS USE DIMENSIONS

CHECKED BY: K. MILLER

STATE OF ALASKA 49th David H. Lowell CE-12614 REGISTERED PROFESSIONAL ENGINEER

DESIGNED BY: D. LOWELL
DRAWN BY: D. LOWELL

STATE OF ALASKA
DEPARTMENT OF TRANSPORTATION & PUBLIC FACILITIES
SOUTHEAST REGION

GUSTAVUS PUBLIC DOCK AND FLOATS
PROJECT #69909

SKIFF FLOAT DETAILS I

PATH: Q:\GUS\68343\MF\PLANSET\FINAL SET\13 - SKIFF FLOAT DETAILS I.DWG
TAB: 13 Friday, March 18, 2011 11:21:52 AM LOWELL, DAVID H (DOT)

REVISIONS			PROJECT DESIGNATION	YEAR	SHEET NO.	TOTAL SHEETS
NO.	DATE	DESCRIPTION				
			69909/DC01158-00	2011	13	15

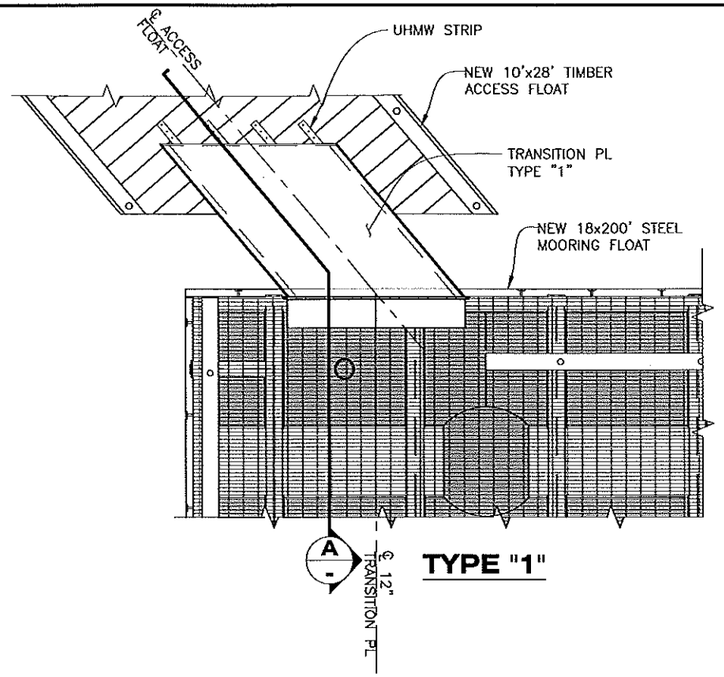

TYPE "1"

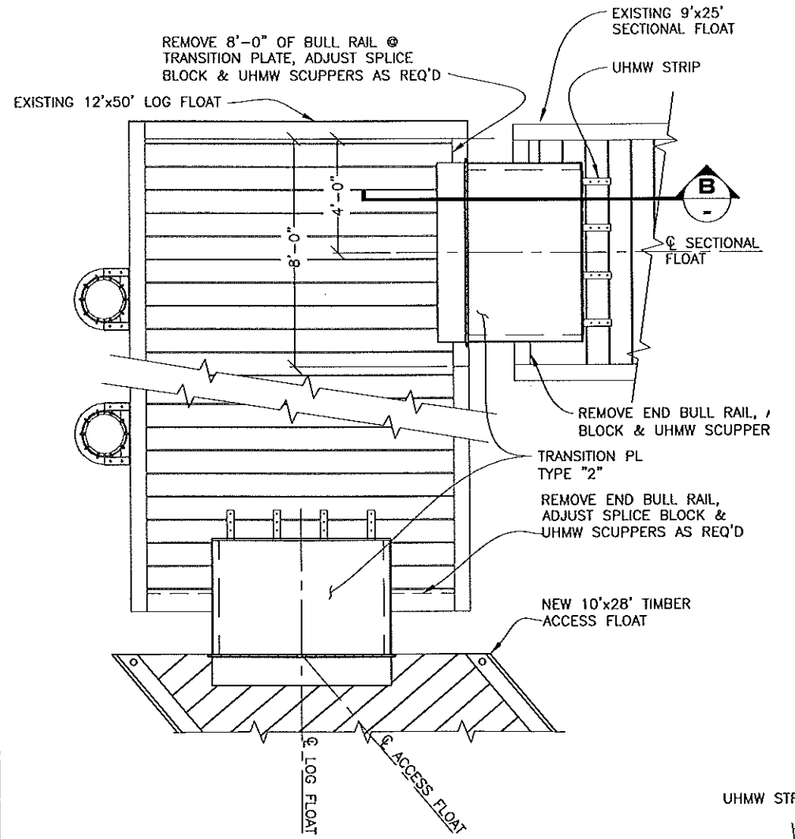

TYPE "2"

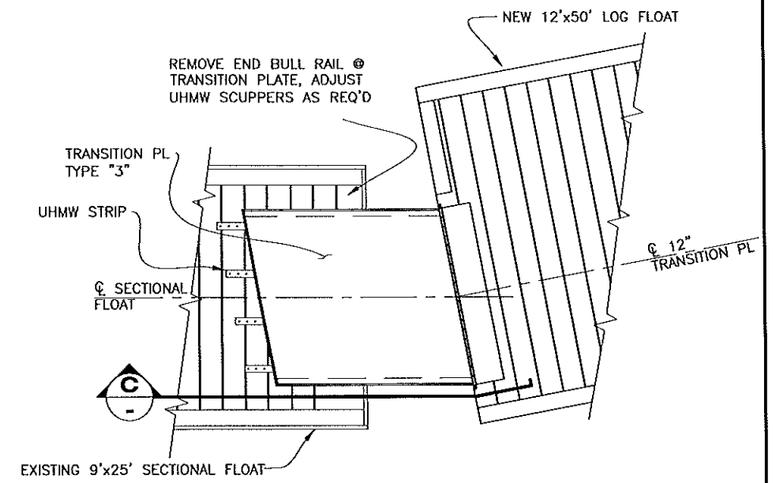

TYPE "3"

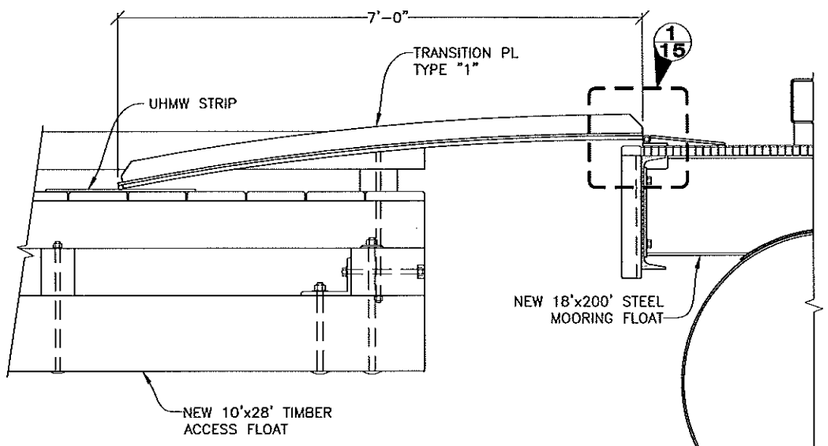

A SECTION

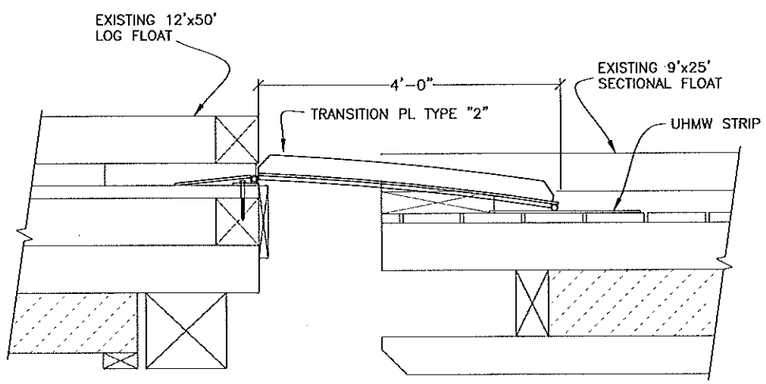

B SECTION

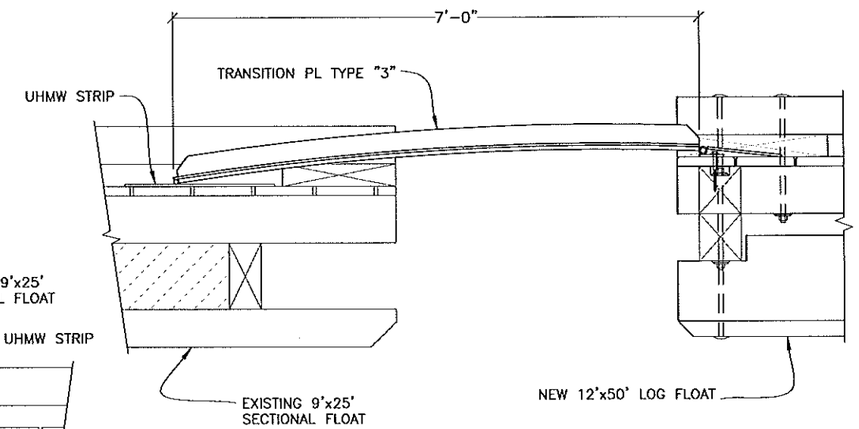

C SECTION

NOTE:

1. INSTALL TRANSITION PL'S AFTER FLOATS HAVE BEEN INSTALLED TO ENSURE PROPER ALIGNMENT.

DO NOT SCALE FROM THESE DRAWINGS USE DIMENSIONS

CHECKED BY: K. MILLER

STATE OF ALASKA 49th David H. Lowell CE-12614 REGISTERED PROFESSIONAL ENGINEER

DESIGNED BY: D. LOWELL
DRAWN BY: D. LOWELL

STATE OF ALASKA
DEPARTMENT OF TRANSPORTATION & PUBLIC FACILITIES
SOUTHEAST REGION

GUSTAVUS PUBLIC DOCK AND FLOATS PROJECT #69909

TRANSITION PLATES

PATH: Q:\GUS\68343\MF\PLANSET\FINAL SET\14 - TRANSITION PLATES.DWG
TAB: 14 Friday, March 18, 2011 11:21:57 AM LOWELL, DAVID H (DOT)

REVISIONS			PROJECT DESIGNATION	YEAR	SHEET NO.	TOTAL SHEETS
NO.	DATE	DESCRIPTION				
			69909/DC01158-00	2011	14	15

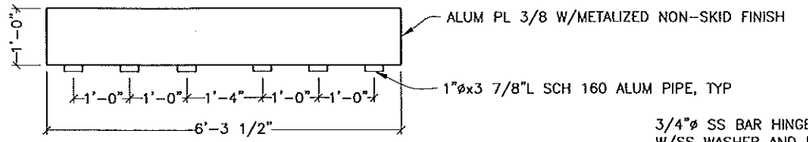

12" TRANSITION PL

BASE BID - 3 REQ'D
ALTERNATE A - 1 REQ'D

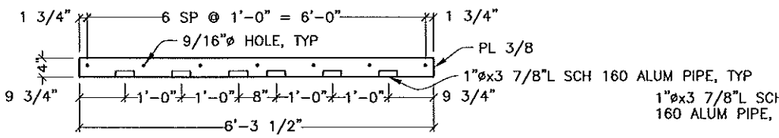

HINGE PL

BASE BID - 3 REQ'D
ALTERNATE A - 1 REQ'D

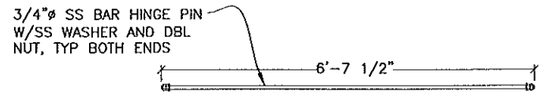

HINGE PIN

BASE BID - 3 REQ'D
ALTERNATE A - 1 REQ'D

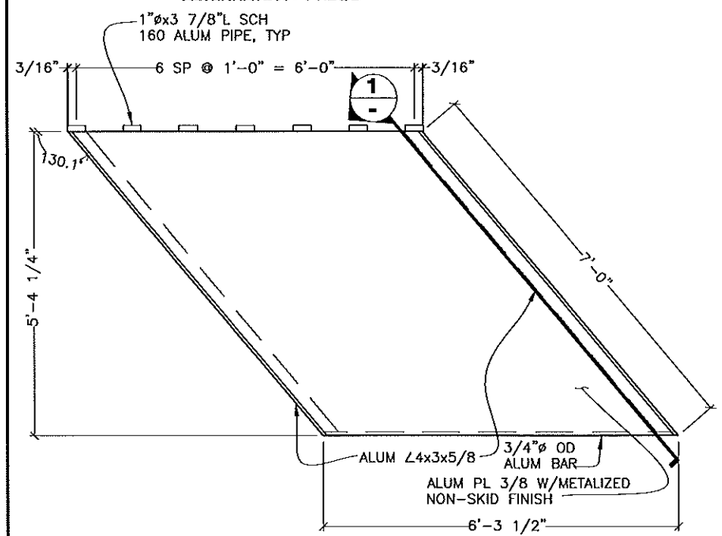

TRANSITION PL TYPE "1"

BASE BID - 1 REQ'D

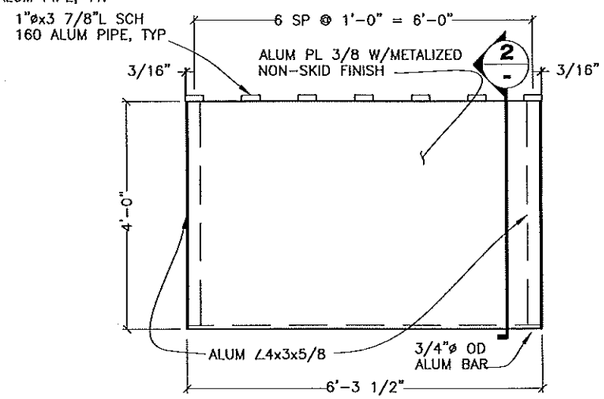

TRANSITION PL TYPE "2"

BASE BID - 2 REQ'D

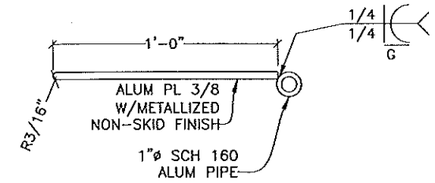

12" TRANSITION PL

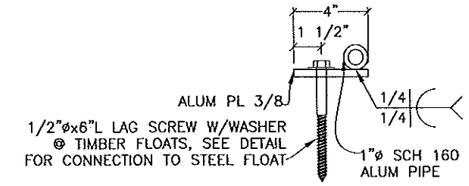

4" HINGE PL

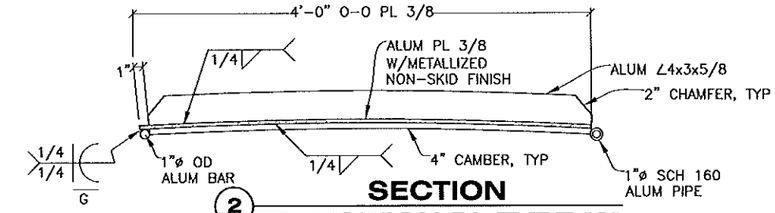

2 SECTION TRANSITION PL TYPE "2"

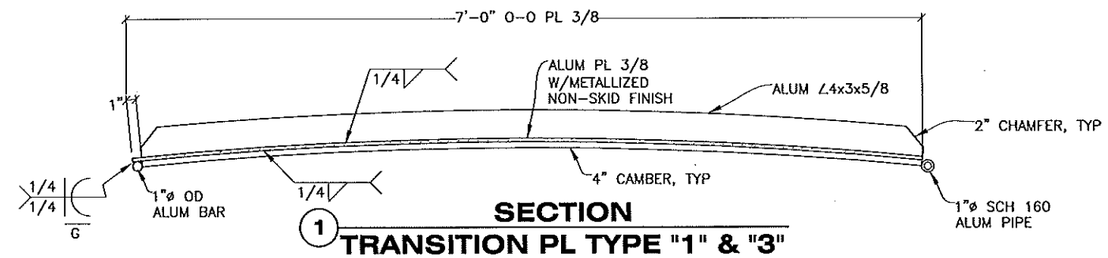

1 SECTION TRANSITION PL TYPE "1" & "3"

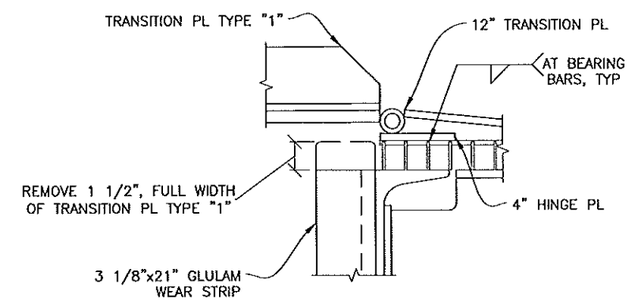

1/15 DETAIL

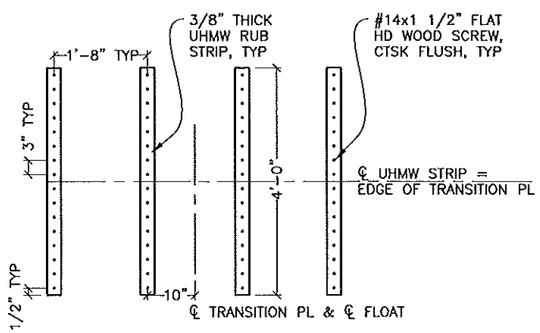

UHMW RUB STRIPS

BASE BID - 12 STRIPS REQ'D
ALTERNATE A - 4 STRIPS REQ'D

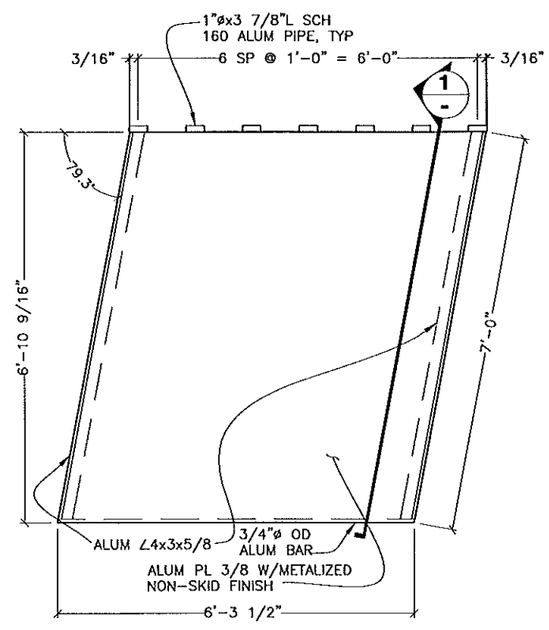

TRANSITION PL TYPE "3"

ALTERNATE A - 1 REQ'D

ALUMINUM TRANSITION PL

DO NOT SCALE FROM THESE DRAWINGS USE DIMENSIONS

CHECKED BY: K. MILLER

STATE OF ALASKA 49th David H. Lowell CE-12614 REGISTERED PROFESSIONAL ENGINEER

DESIGNED BY: D. LOWELL
DRAWN BY: D. LOWELL

STATE OF ALASKA
DEPARTMENT OF TRANSPORTATION
& PUBLIC FACILITIES
SOUTHEAST REGION

GUSTAVUS PUBLIC DOCK AND FLOATS PROJECT #69909

TRANSITION PLATES DETAILS I

PATH: O:\GUS\68343\MF\PLANSET\FINAL SET\15 - TRANSITION PLATE DETAILS I.DWG
TAB: 15 Friday, March 18, 2011 11:22:07 AM LOWELL, DAVID H (DOT)

REVISIONS			PROJECT DESIGNATION	YEAR	SHEET NO.	TOTAL SHEETS
NO.	DATE	DESCRIPTION	69909/DC01158-00	2011	15	15