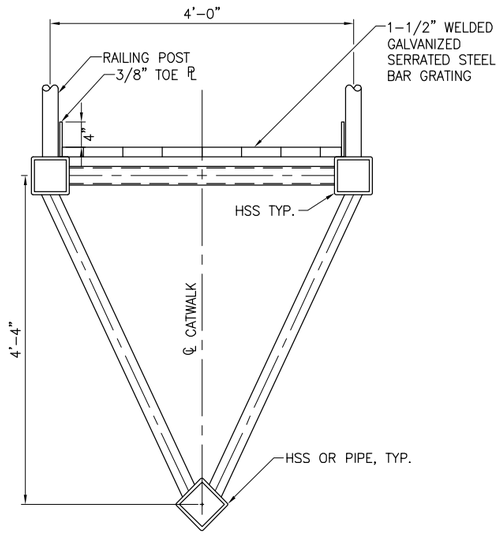

A / C-1A **CATWALK TYPICAL SECTION**
SCALE: 1/2" = 1'

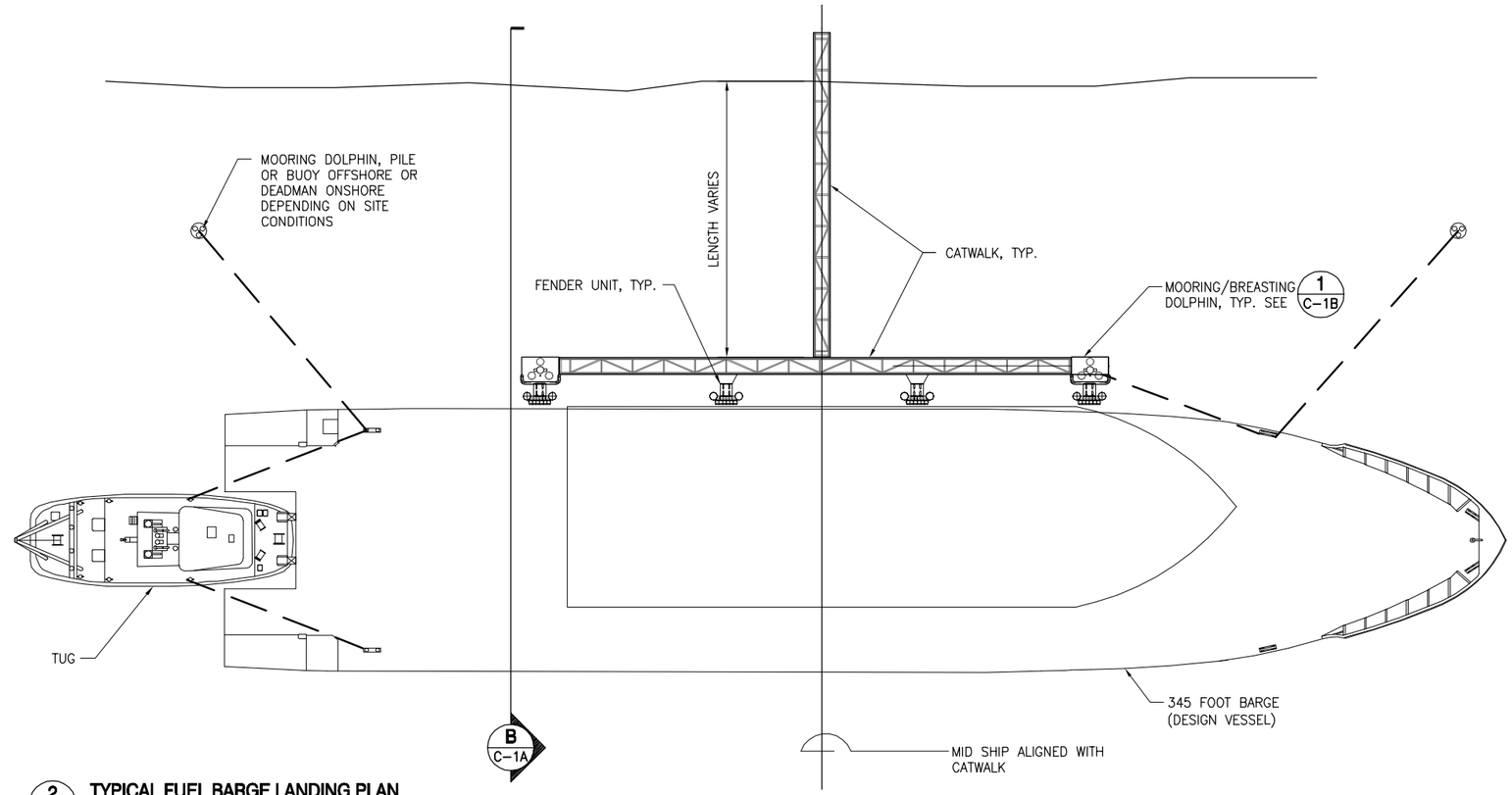

2 / C-1A **TYPICAL FUEL BARGE LANDING PLAN**
SCALE: 1" = 40'

NOTE:
1. THIS CONCEPT IS DEVELOPED FOR FUEL BARGE LANDINGS, TO ALLOW SAFE TIE-UP AND AVOID FLOATING HOSE TO SHORE IN LOCATIONS WHERE SITE CONDITIONS PREVENT BEACH LANDINGS.
2. THE TOTAL NUMBER AND TYPE OF DOLPHINS MAY VARY DEPENDING ON DESIGN VESSEL, AND SITE CONDITIONS.

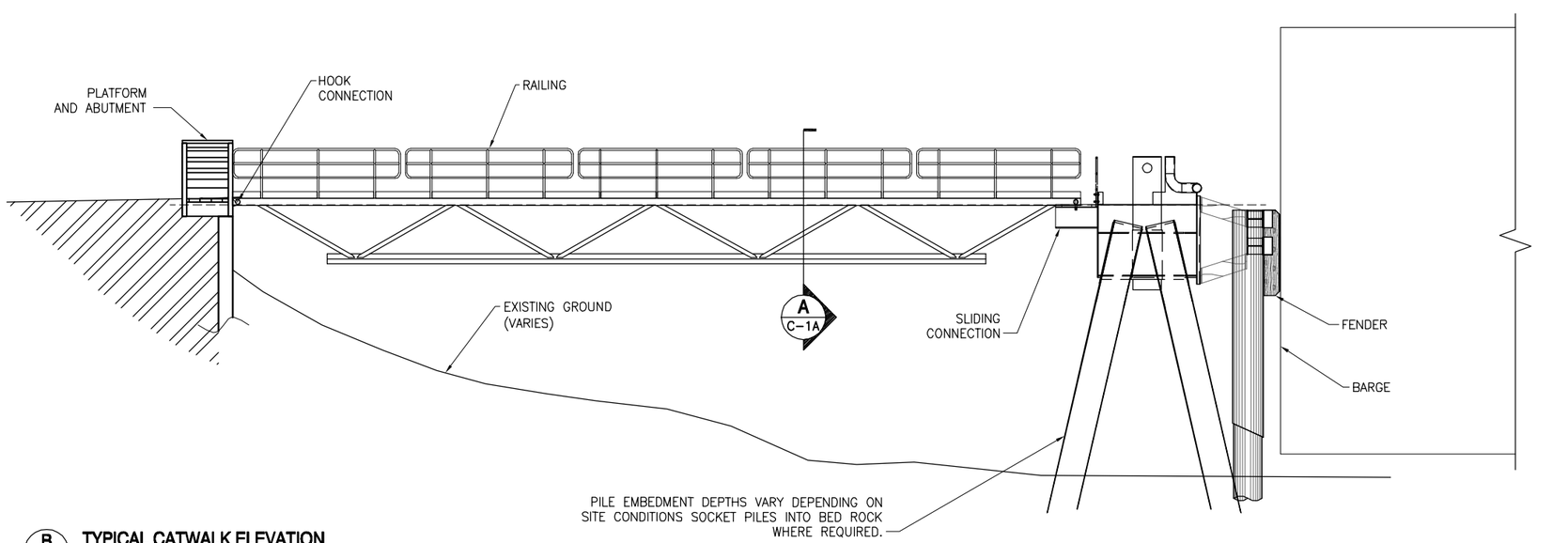

B / C-1A **TYPICAL CATWALK ELEVATION**
SCALE: 1" = 10'

CONCEPTUAL DESIGN

URS
560 EAST 34TH AVE. SUITE 100
ANCHORAGE, AK 99503
TEL: (907) 562-3366
FAX: (907) 562-1297

NOTES / REVISIONS:

USACE
ALASKA BARGE LANDING SYSTEM IMPROVEMENT DESIGN

FUEL TRANSFER CATWALK PLAN AND PROFILE

PROJECT No:	26220028
DATE:	05/27/2010
DESIGNED:	KN
DRAWN BY:	BG
CHECKED BY:	KN
SHEET:	C-1A
PAGE:	1 OF 5

REV. 7/17/2007

DRAWING PATH: M:\26220028_BargeStudyPhase2\0400 Drawings (Task 2 & 3)\402 Working Dwgs ConceptDwgs\C-4_sheetpile Dock_recover.dwg
PLOTTER: ----

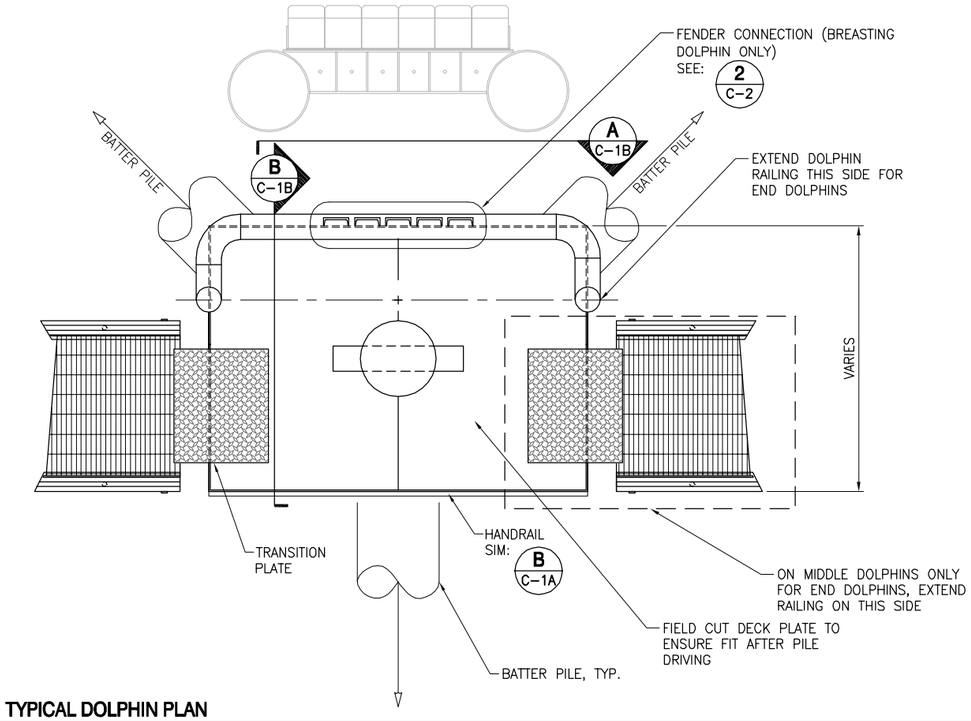

1 C-1B TYPICAL DOLPHIN PLAN
SCALE: 1/4" = 1'-0"

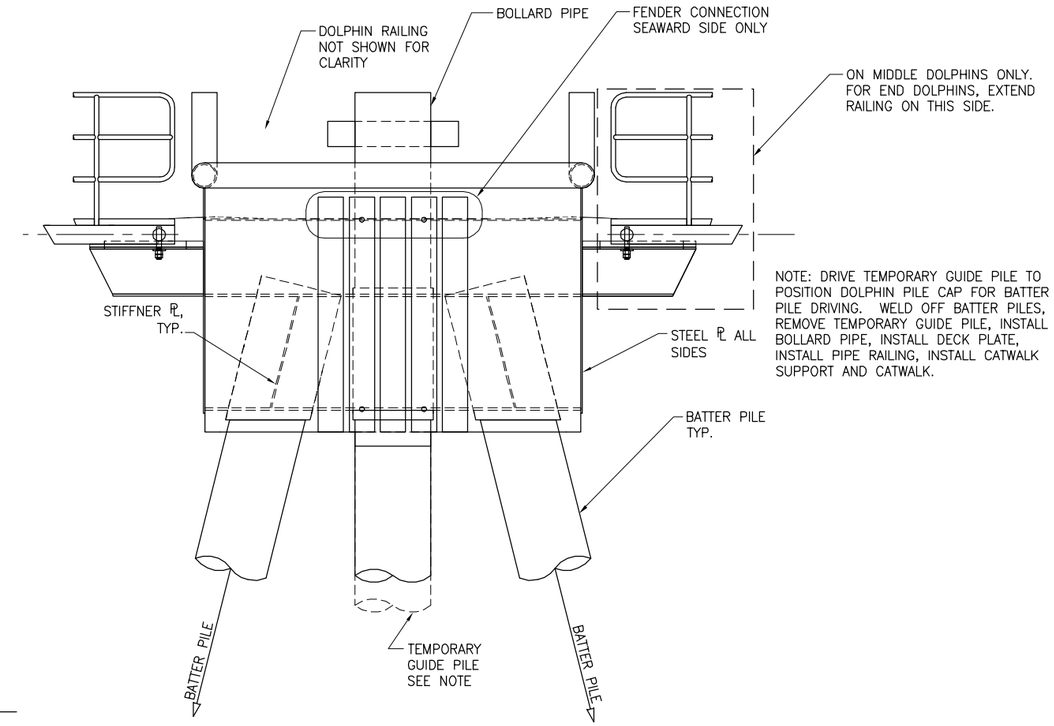

A C-1B DOLPHIN TYPICAL ELEVATION
SCALE: 1/4" = 1'-0"

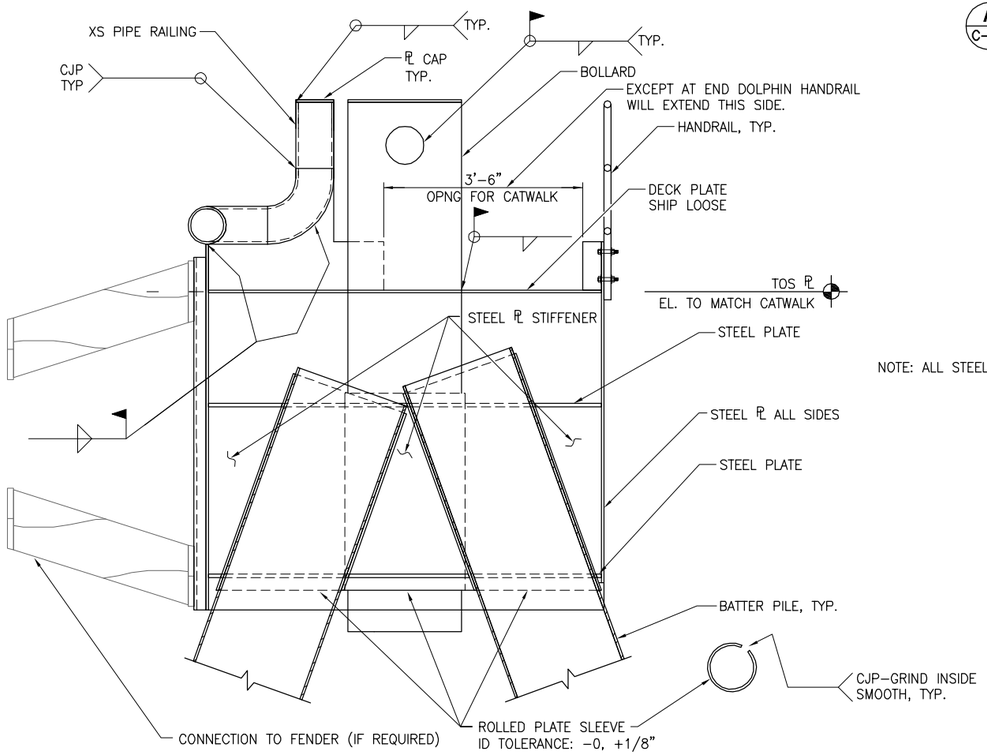

NOTE: ALL STEEL SHALL BE GALVANIZED.

B C-1B DOLPHIN PILE CAP SECTION
SCALE: 3/8" = 1'-0"

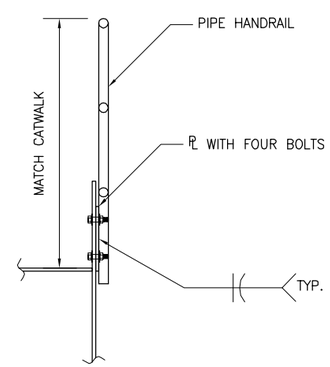

C C-1B HANDRAIL CONNECTION DETAIL
SCALE: 1/2" = 1'-0"

NOTE:
1. DOLPHINS MAY BE USED WITHOUT FENDERS TO ACT AS MOORING DOLPHINS ONLY.
2. 3 EA. OR 5 EA. PILES MAY BE REQUIRED FOR THE DOLPHIN ARRANGEMENT DEPENDING ON EXPECTED MOORING/BERTHING LOADS AND THE SITE CONDITIONS.

CONCEPTUAL DESIGN

URS
560 EAST 34TH AVE. SUITE 100
ANCHORAGE, AK 99503
TEL: (907) 562-3366
FAX: (907) 562-1297

NOTES / REVISIONS:

USACE
ALASKA BARGE LANDING SYSTEM IMPROVEMENT DESIGN

TYPICAL DETAILS
MOORING/BREASTING DOLPHIN

PROJECT No: 26220028
DATE: 05/27/2010
DESIGNED: KN
DRAWN BY: BG
CHECKED BY: KN
SHEET: C-1B
PAGE: 2 OF 5

REV. 7/17/2007

PLOTTED: 5/26/2010 1:00 DRAWING Path: M:\26220028_BargeStudyPhase2\0400 Drawings (Task 2 & 3)\402 Working Dwgs ConceptDwgs\C-1B_Dolphin Detail.dwg

A
C-2

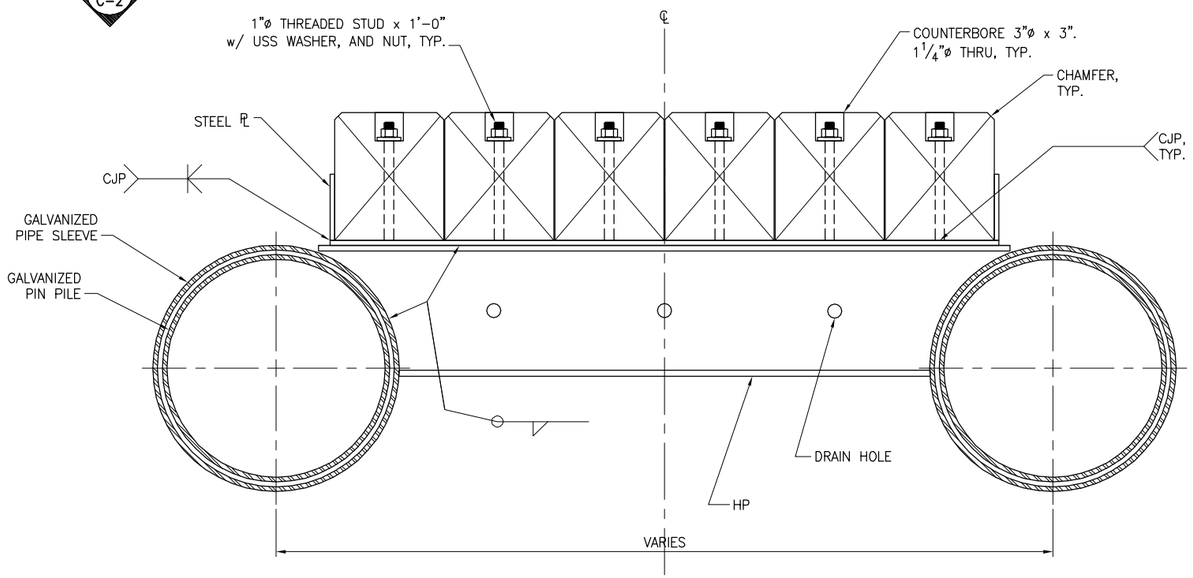

1
C-2

TYPICAL FENDER SECTION PLAN VIEW

SCALE: 3/4" = 1'-0"

NOTE:
FENDER MAY BE USED SEPARATELY FOR INSTALLATION AT DOCKS, OR IN CONJUNCTION WITH DOLPHINS SHOWN ON SHEET C-1B

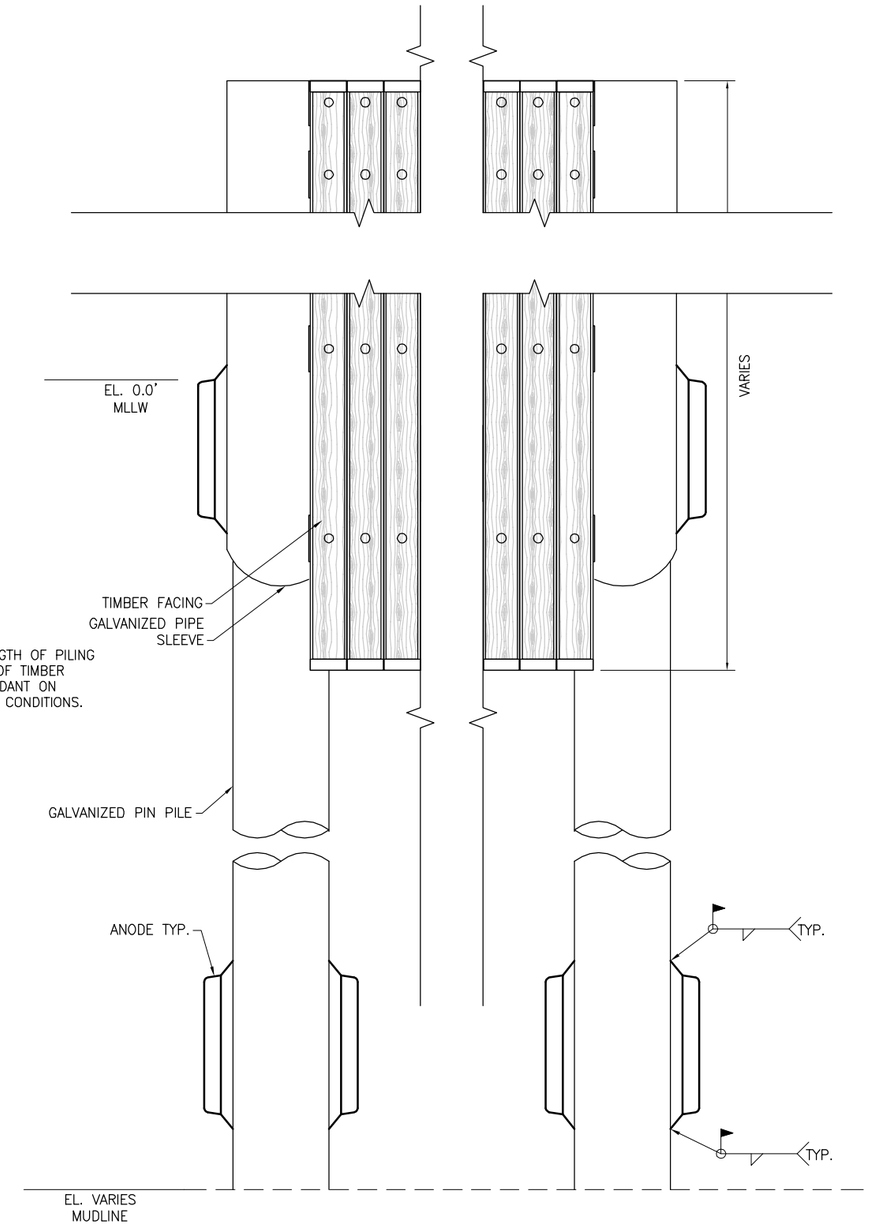

NOTE:
SIZE AND LENGTH OF PILING AND LENGTH OF TIMBER FACING DEPENDANT ON SITE-SPECIFIC CONDITIONS.

A
C-2

TYPICAL FENDER ELEVATION

SCALE: 1/4" = 1'-0"

CONCEPTUAL DESIGN

URS
560 EAST 34TH AVE. SUITE 100
ANCHORAGE, AK 99503
TEL: (907) 562-3366
FAX: (907) 562-1297

NOTES / REVISIONS:

USACE
ALASKA BARGE LANDING SYSTEM
IMPROVEMENT DESIGN

TYPICAL DOCK FENDER

PROJECT No:	26220028
DATE:	05/27/2010
DESIGNED:	KN
DRAWN BY:	BG
CHECKED BY:	KN
SHEET:	C-2
PAGE:	3 OF 5

REV. 7/17/2007

PLOTTED:5/26/2010 1:00 PM DRAWING PATH:M:\26220028_BargeStudyPhase2\1400 Drawings (Task 2 & 3)\402 Working Dwgs Concept\Dwgs\C-2_Fender Details.dwg

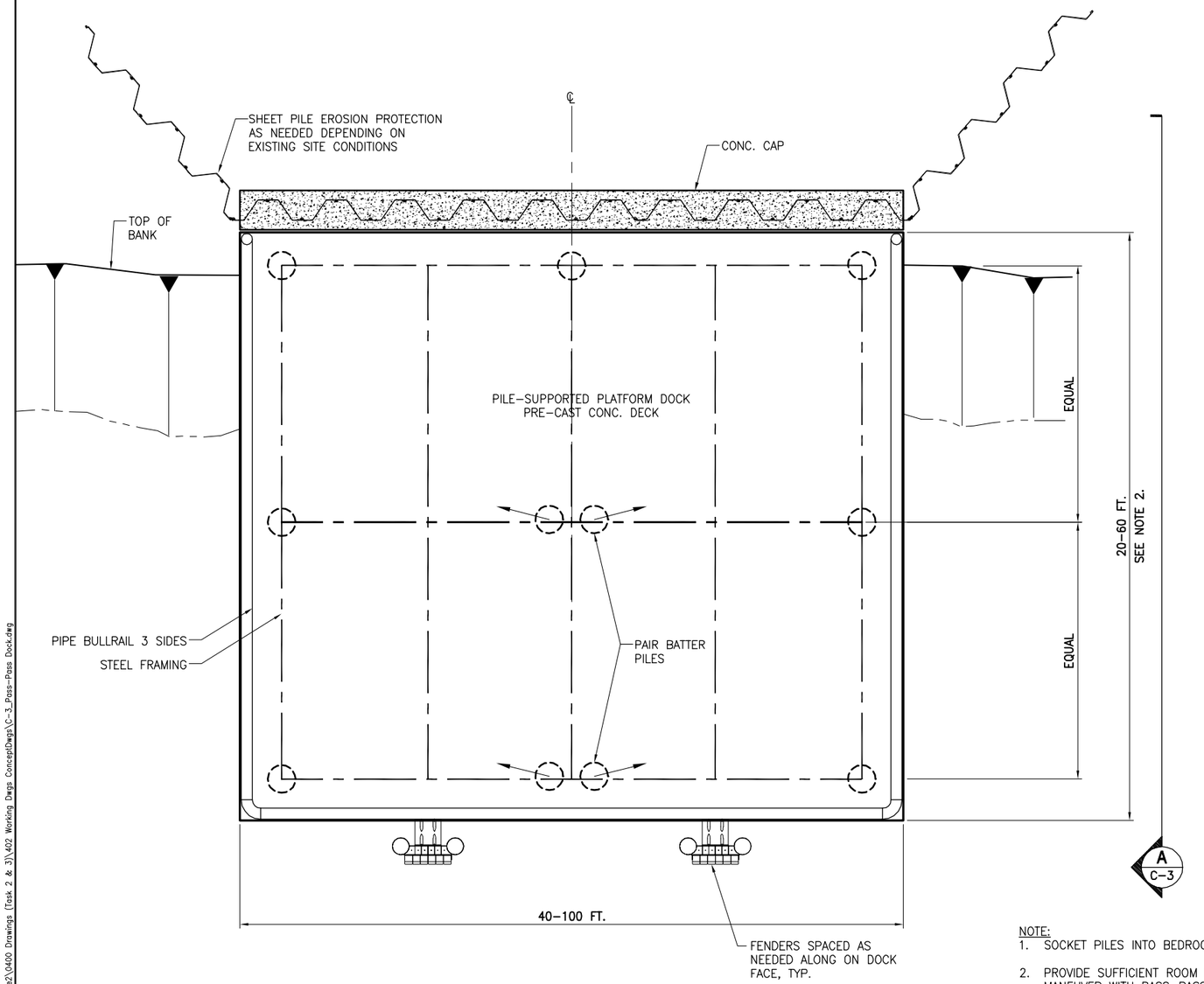

1 C-3 **PASS-PASS DOCK PLAN**
SCALE: 1/8" = 1'-0"

NOTE:
1. SOCKET PILES INTO BEDROCK WHERE REQUIRED.
2. PROVIDE SUFFICIENT ROOM FOR FORKLIFT TO MANEUVER WITH PASS-PASS TABLE.
3. PILE QUANTITY AND LAYOUT WILL VARY DEPENDING ON DOCK SIZE.

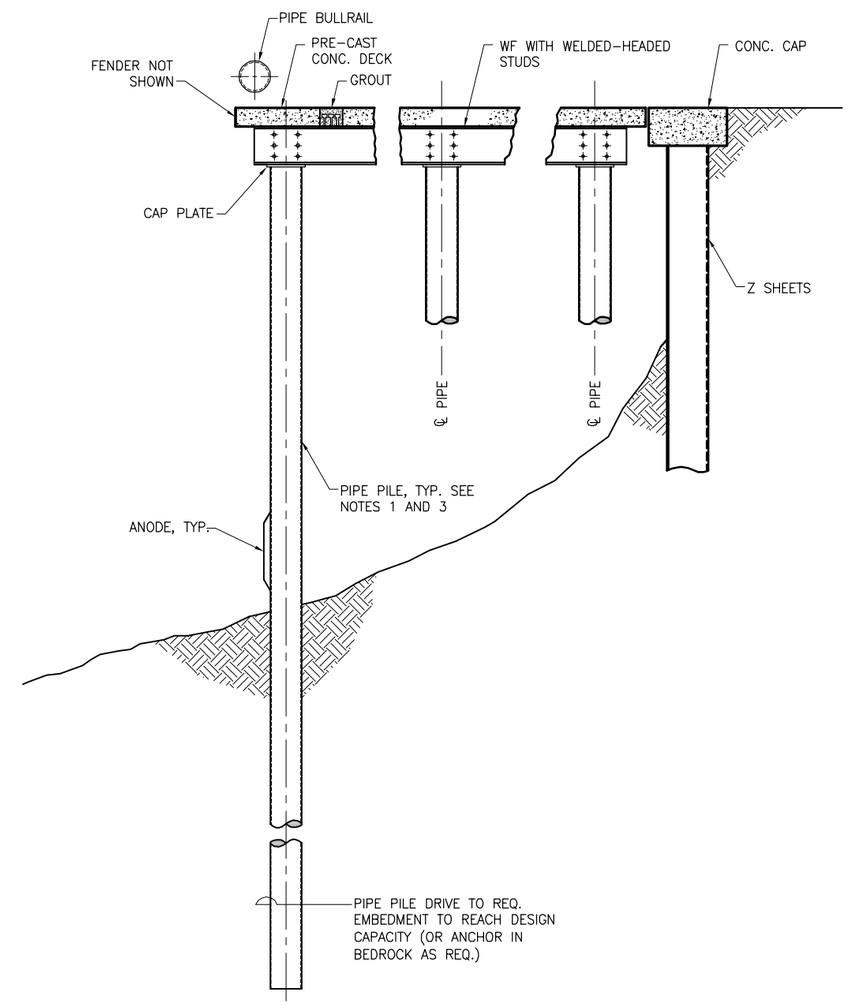

A C-3 **PASS-PASS DOCK ELEVATION**
SCALE: 1/8" = 1'-0"

CONCEPTUAL DESIGN

URS
560 EAST 34TH AVE. SUITE 100
ANCHORAGE, AK 99503
TEL: (907) 562-3366
FAX: (907) 562-1297

NOTES / REVISIONS:

USACE
ALASKA BARGE LANDING SYSTEM IMPROVEMENT DESIGN
PASS-PASS DOCK

PROJECT No:	26220028
DATE:	05/27/2010
DESIGNED:	KN
DRAWN BY:	BG
CHECKED BY:	KN
SHEET:	C-3
PAGE:	4 OF 5

PLOTTED: 5/26/2010 1:00 DRAWING PATH: M:\26220028_BargeStudyPhase2\0400 Drawings (Task 2 & 3)\402 Working Dwgs ConceptDwgs\C-3_Pass-Pass Dock.dwg
REV. 7/17/2007

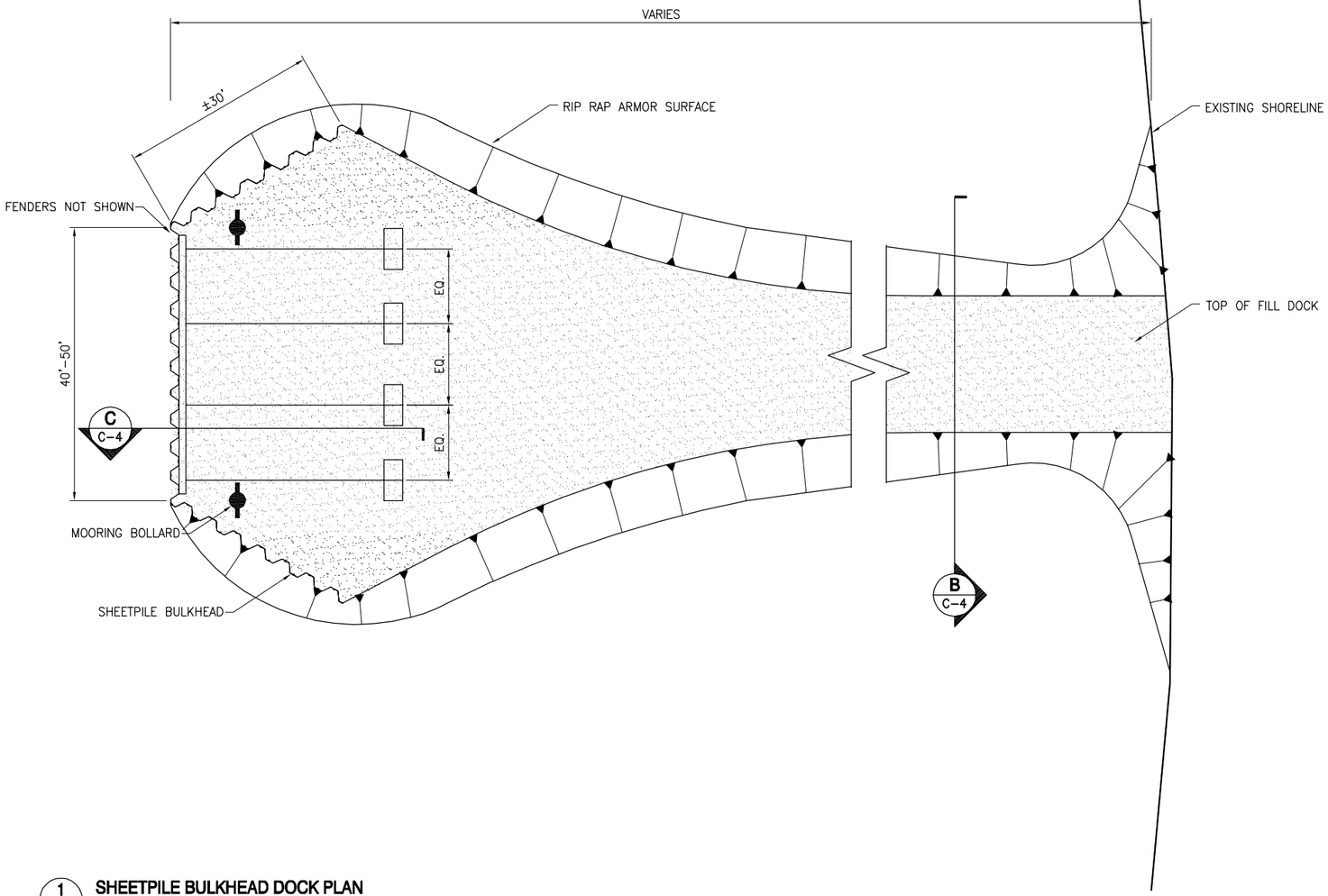

1 C-4 **SHEETPILE BULKHEAD DOCK PLAN**
SCALE: 1" = 10'-0"

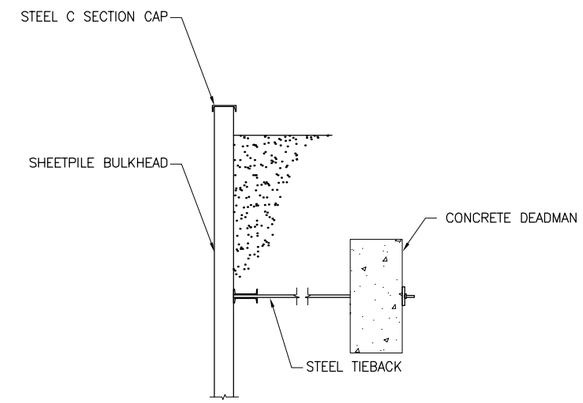

C C-4 **SHEETPILE BULKHEAD SECTION AT TIEBACK**
SCALE: 1/4" = 1'-0"

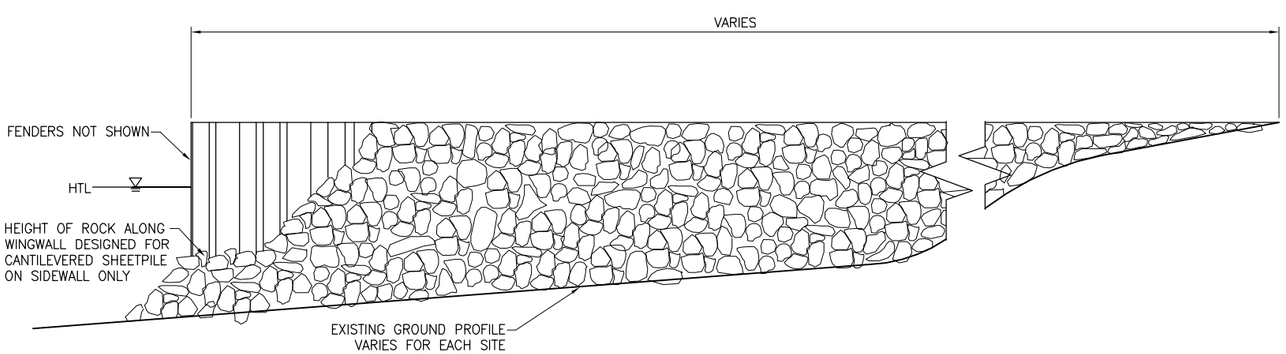

A C-4 **SHEETPILE BULKHEAD DOCK ELEVATION**
SCALE: 1" = 10'-0"

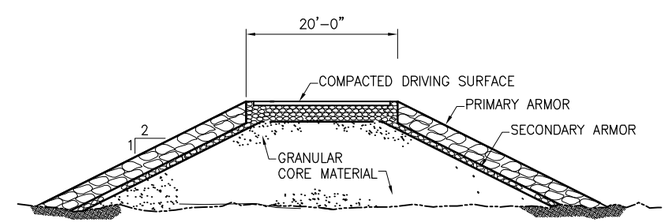

B C-4 **SHEETPILE BULKHEAD DOCK SECTION**
SCALE: 1" = 10'-0"

CONCEPTUAL DESIGN

URS
560 EAST 34TH AVE. SUITE 100
ANCHORAGE, AK 99503
TEL: (907) 562-3366
FAX: (907) 562-1297

NOTES / REVISIONS:

USACE
ALASKA BARGE LANDING SYSTEM IMPROVEMENT DESIGN

SHEETPILE BULKHEAD TYPE DOCK

PROJECT No:	26220028
DATE:	05/27/2010
DESIGNED:	KN
DRAWN BY:	CB
CHECKED BY:	CF
SHEET:	C-4
PAGE:	5 OF 5

REV. 7/17/2007

PLOTTED:5/26/2010 1:01 DRAWING PATH:M:\26220028_BargeStudy\Phase2\0400 Drawings (Task 2 & 3)\402 Working Dwgs Concept\Dwgs\C-4_sheetpile Dock_recover.dwg