HUSLIA, ALASKA
EROSION MITIGATION
WATER SYSTEM MODIFICATIONS
ISSUED FOR AGENCY REVIEW

PLAN SET NUMBER: HSL-19-007
ANTHC PROJECT NUMBER: AN-19-JF7

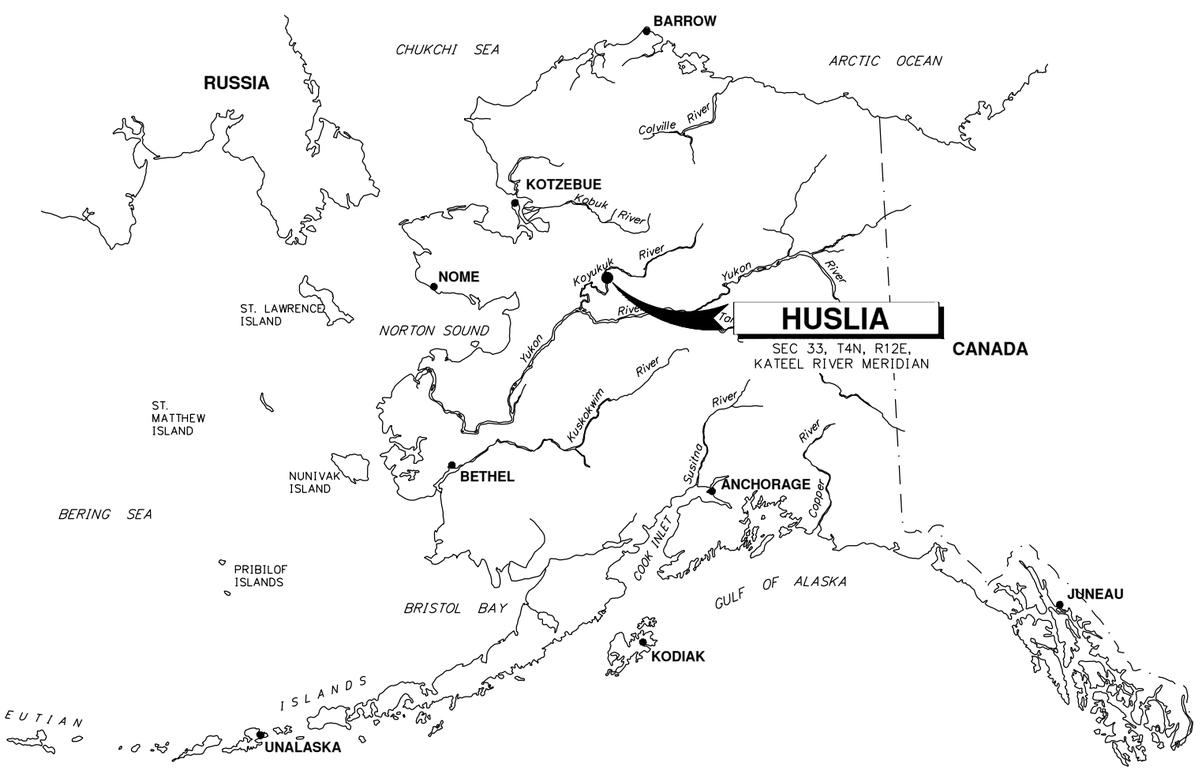

SHEET LIST TABLE	
SHEET NUMBER	**SHEET TITLE**
G-001	COVER SHEET AND INDEX
G-002	GENERAL LEGEND, ABBREVIATIONS AND VICINITY MAP
G-003	SCOPE OF WORK AND DESIGN CRITERIA
G-004	COMMUNITY SITE PLAN AND WATER MAINS
V-101	SITE CONTROL
V-102	RIGHT-OF-WAY
C-001	CIVIL LEGEND AND ABBREVIATIONS
CW-401	SITE 1 - WATER JUMPER LINE
CW-402	SITE 2 - WATER JUMPER LINE
CW-501	MISC. PIPING DETAILS
CW-502	JUMPER LINE TIE-IN DETAILS
SD-130	ARCTIC PRESSURE PIPE AND FITTINGS
SD-131	ARCTIC PRESSURE PIPE CONNECTIONS
SD-150	INSULATED PIPE TRENCH SECTIONS

ALASKA NATIVE TRIBAL HEALTH CONSORTIUM
DIVISION OF ENVIRONMENTAL HEALTH AND ENGINEERING
4500 DIPLOMACY DRIVE
ANCHORAGE, ALASKA, 99508-3440
PHONE: (907) 729-3600
FAX: (907) 729-4090
http://www.dehe.org

CRW ENGINEERING GROUP, LLC
3940 ARCTIC BLVD. SUITE 300
ANCHORAGE, ALASKA 99503
PHONE: (907) 562-3252
#AECL882-AK

GENERAL SYMBOLS

X VIEW TITLE XX"-XX' — VIEW NUMBER	DRAWING TITLE OR SECTION TITLE
X VIEW TITLE HORZ. SCALE XX"-XX' VERT. SCALE XX"-XX' — VIEW NUMBER	DRAWING TITLE OR SECTION TITLE WITH VERTICAL AND HORIZONTAL SCALE
VIEW NUMBER — X X-XXX — SHEET NUMBER	SECTION INDICATOR
VIEW NUMBER — X X-XXX — SHEET NUMBER	DRAWING OR PHOTO/IMAGE ELEVATION INDICATOR
VIEW NUMBER — X X-XXX — SHEET NUMBER	CALL OUT BUBBLE
0 1" 2"	ARCHITECTURAL GRAPHIC SCALE
0 1' 2'	ENGINEERING GRAPHIC SCALE
	BREAK LINE
#	KEY NOTE INDICATOR (REFERS TO NOTE ON SAME SHEET)
MATCH LINE, SEE X-XXX	MATCH LINE
X	REVISION INDICATOR

ABBREVIATIONS

ABS	ACRYLONITRILE BUTADIENE STYRENE
ADEC	ALASKA DEPARTMENT OF ENVIRONMENTAL CONSERVATION
ALUM	ALUMINUM
ANSI	AMERICAN NATIONAL STANDARDS INSTITUTE
APPROX	APPROXIMATELY
ARV	AIR RELEASE VALVE
AS	ASPHALT
AVEC	ALASKA VILLAGE ELECTRIC COOPERATIVE
AVG	AVERAGE
AWWA	AMERICAN WATER WORKS ASSOCIATION
BH	BORE HOLE
BLDG	BUILDING
BMP	BEST MANAGEMENT PRACTICE
BOH	BOTTOM OF HOLE
BTU	BRITISH THERMAL UNITS
CFM	CUBIC FEET PER MINUTE
CL	CENTERLINE
CO	CLEANOUT
CONC	CONCRETE
CMP	CORRUGATED METAL PIPE
DCCED	DEPARTMENT OF COMMERCE, COMMUNITY AND ECONOMIC DEVELOPMENT
DIA	DIAMETER
DI	DUCTILE IRON
DIST	DISTANCE
DWV	DRAIN WASTE VENT
EG	EXISTING GROUND/GRADE
ELEC	ELECTRIC
ELEV	ELEVATION
FF	FINISHED FLOOR
FG	FINISHED GROUND/GRADE
FLG	FLANGE
FM	FORCE MAIN
FPS	FEET PER SECOND
FPT	FEMALE PIPE THREAD
GA	GAUGE
GALV	GALVANIZED
GPD	GALLONS PER DAY
GPM	GALLONS PER MINUTE
HDPE	HIGH DENSITY POLYETHYLENE
HORZ	HORIZONTAL
HP	HORSEPOWER
HUD	U.S. DEPARTMENT OF HOUSING AND URBAN DEVELOPMENT
HWL	HIGH WATER LEVEL
ID	INSIDE DIAMETER
I/I	INFILTRATION/INFLOW
INV	INVERT
IPS	IRON PIPE SIZE
LB	POUNDS
LF	LINEAR FEET
LPS	LOW PRESSURE SEWER
LPSS	LOW PRESSURE SEWER SERVICE
MAX	MAXIMUM
MH	MANHOLE
MIN	MINIMUM
MLLW	MEAN LOWER LOW WATER
MPT	MALE PIPE THREAD
NC	NORMALLY CLOSED
NIC	NOT IN CONTRACT
NFS	NON FROST SUSCEPTIBLE
NO	NORMALLY OPEN
NPSH	NET POSITIVE SUCTION HEAD
NSF	NATIONAL SANITATION FOUNDATION
NTS	NOT TO SCALE
OC	ON CENTER
OD	OUTSIDE DIAMETER
OSHA	OCCUPATIONAL SAFETY & HEALTH ADMINISTRATION
PE	POLYETHYLENE
PERC	PERCOLATION
PEX	CROSS-LINKED POLYETHYLENE
PP	POWER POLE
PSF	POUNDS PER SQUARE FOOT
PSI	POUNDS PER SQUARE INCH
PT	PERCOLATION TEST
PVC	POLYVINYL CHLORIDE
REPS	RESIDENTIAL EFFLUENT PUMPING STATION
ROW	RIGHT OF WAY
SDR	STANDARD DIMENSIONING RATIO
SL	SLOPE
SS	SEWER SERVICES OR STAINLESS STEEL
STA	STATION
SUBD	SUBDIVISION
SWPPP	STORM WATER POLLUTION PREVENTION PLAN
SWT	SWEAT
TDH	TOTAL DYNAMIC HEAD
THD	THREADED
TYP	TYPICAL
UHMW	ULTRA HIGH MOLECULAR WEIGHT
VERT	VERTICAL
VFD	VARIABLE FREQUENCY DRIVE
WST	WATER STORAGE TANK
WTP	WATER TREATMENT PLANT

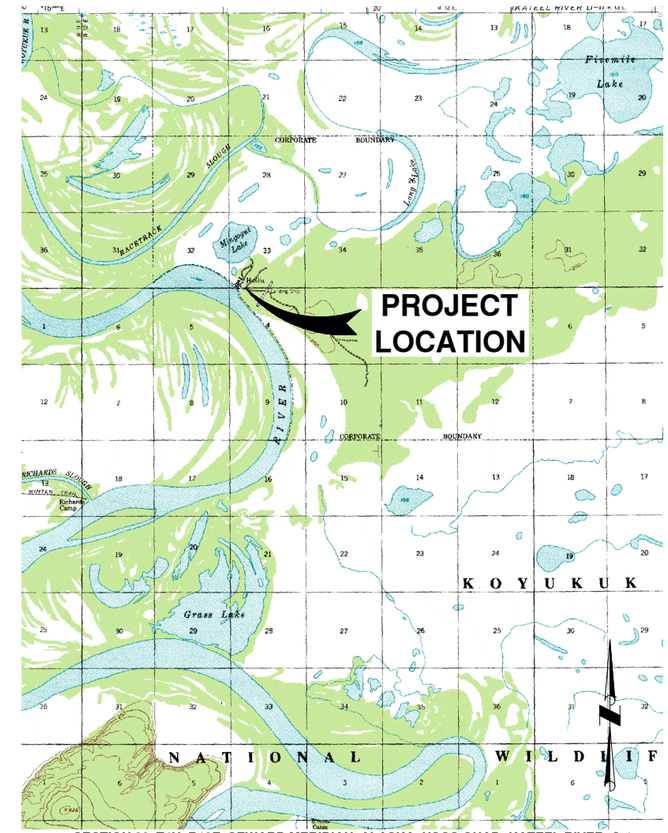

SECTION 33, T4N, R12E, SEWARD MERIDIAN, ALASKA, USGS QUAD: KATEEL RIVER C-1

VICINITY MAP

SCALE: 1" = 5280'

Division of Environmental Health and Engineering
4500 Diplomacy Drive
Anchorage, Alaska 99508
(907) 729-3600

STATE OF ALASKA 49TH David W. Diller CE-8822 03/25/20 REGISTERED PROFESSIONAL ENGINEER

0 1"
BAR IS ONE INCH ON ORIGINAL DRAWING, IF NOT ADJUST SCALES ACCORDINGLY

HUSLIA, AK
EROSION MITIGATION
WATER SYSTEM MODIFICATIONS
ISSUED FOR AGENCY REVIEW

MRK	DATE	DESCRIPTION	INIT

PLAN SET:	HSL-19-007
PROJ MGR:	JVS
PROJ ENG:	DWD
DRUMS ENG:	XXX
DRAWN BY:	KEG

SHEET TITLE

GENERAL LEGEND, ABBREVIATIONS AND VICINITY MAP

G-002

SHEET 2 OF 4

SCOPE OF WORK

1. JUMPER LINES SHALL BE CONSTRUCTED IN TWO LOCATIONS BETWEEN TWO POINTS ON THE EXISTING DOWNTOWN AREA WATER MAIN LOOP AS SHOWN ON THE DRAWINGS.
2. FURNISH AND INSTALL NEW BURIED INSULATED 6-INCH DIAMETER SDR11 HDPE PRESSURE WATER MAIN JUMPER LINES AND VALVES IN TWO LOCATIONS:
   - SITE 1: APPROXIMATELY 217 LF
   - SITE 2: APPROXIMATELY 153 LF
3. THESE JUMPER LINES SHALL REMAIN EMPTY AND DORMANT UNTIL SUCH TIME THAT THE EXISTING WATER MAIN LOOP IS COMPROMISED DUE TO RIVER BANK EROSION AND IT IS NECESSARY TO ISOLATE THE COMPROMISED SECTION BY ACTIVATING THE JUMPER LINES.
4. SERVICE CONNECTIONS ARE NOT ALLOWED ON THE JUMPER LINES.
5. RESTORE ROAD SURFACE AND OTHER PUBLIC AND PRIVATE IMPROVEMENTS DISTURBED DURING CONSTRUCTION ACTIVITIES TO PRECONSTRUCTION OR BETTER CONDITION.

DESIGN CRITERIA

POPULATION DATA

POPULATION FROM 2018 DDCED	310
DESIGN POPULATION	421
ESTIMATED NO. OF BUILDINGS. SUPPLIED BY WATER MAINS	84

ENVIRONMENTAL DATA

MEAN ANNUAL TEMPERATURE	25° F
MEAN ANNUAL SNOWFALL	60 IN
MEAN ANNUAL RAINFALL	15 IN
DESIGN FREEZING INDEX	7100 °F DAYS
DESIGN THAWING INDEX	3100 °F DAYS
MEAN ANNUAL HEATING DEGREE DAYS	15,400

NOTE: SOURCE(S) FOR DATA FROM THE ENVIRONMENTAL ATLAS OF ALASKA AND THE ALASKA CLIMATE RESEARCH CENTER AT http://climate.gi.alaska.edu

GENERAL NOTES

1. CONSTRUCTION AND MATERIAL SPECIFICATIONS ARE INCLUDED ON THE DRAWINGS AND IN A SEPARATE SPECIFICATION PACKAGE. THE DRAWINGS AND SPECIFICATIONS CONSTITUTE A COMPLETE AND INSEPARABLE SET OF CONSTRUCTION DOCUMENTS TO ENSURE THE PROJECT, AS CONSTRUCTED, MEETS THE DESIGN INTENT. ANY CHANGES TO CONSTRUCTION MATERIALS SHALL BE APPROVED IN ADVANCE BY THE RESPONSIBLE REGISTERED PROFESSIONAL.
2. RECORD DRAWINGS – THE CONTRACTOR SHALL MAINTAIN A CLEAN SET OF AS-BUILT DRAWINGS FOR RECORD INFORMATION AT THE PROJECT OFFICE. ALL REQUIRED INFORMATION SHALL BE RECORDED IN RED PENCIL ON A DAILY BASIS IN NEAT, LEGIBLE FASHION. ALL ELEVATIONS AND DISTANCES SHOWN ON THE PLANS SHALL BE MARKED ASB (AS-BUILT) OR FC (FIELD CHANGE) WITH THE CORRECT VALUE INSERTED. ALL SURVEY NOTES SHALL BE KEPT IN GOOD QUALITY FIELD BOOKS AND SUBMITTED TO THE ENGINEER WITH THE RECORD DRAWINGS AT THE END OF CONSTRUCTION.
3. HISTORICAL PRESERVATION – SHOULD ANY ARCHAEOLOGICAL, CULTURAL OR PALEONTOLOGICAL RESOURCES BE DISCOVERED DURING CONSTRUCTION ACTIVITY, ALL WORK THAT WOULD DISTURB SUCH RESOURCES SHALL BE STOPPED AND THE OFFICE OF HISTORY AND ARCHAEOLOGY SHALL BE CONTACTED IMMEDIATELY AT (907)269-8721.
4. SURVEYING – ALL SURVEYING AND STAKING ESSENTIAL FOR THE COMPLETION OF THIS PROJECT SHALL BE PERFORMED BY A REGISTERED LAND SURVEYOR WITH A MINIMUM 5 YEARS OF CONSTRUCTION SURVEY EXPERIENCE. FIELD NOTES SHALL BE RECORDED IN STANDARD HARD-BOUND ALL WEATHER TYPE FIELD BOOKS AND KEPT IN A CLEAR, ORDERLY, AND NEAT MANNER. A MINIMUM OF TWO KNOWN BENCH MARKS SHALL BE USED WHEN ESTABLISHING TBM'S. ALL TBM'S SHALL BE LOCATED AND BE CONSTRUCTED IN SUCH A FASHION THAT THEIR INTEGRITY WILL NOT BE COMPROMISED THROUGHOUT THE LIFE OF THE PROJECT. AS-BUILT SURVEY MEASUREMENTS SHALL BE RECORDED ON A CLEAN SET OF DRAWINGS AND SHALL SHOW CHANGES AND IMPROVEMENTS WHICH VARY FROM THE DIMENSIONS, LINES, GRADES, AND LOCATIONS SHOWN ON THE DRAWINGS.
5. BARRICADES AND WARNING SIGNS SHALL BE PROVIDED TO ADVISE RESIDENTS OF ROAD CLOSURES, DETOURS, AND OTHER HAZARDOUS CONDITIONS. BARRICADES AND WARNING SIGN MATERIALS AND PLACEMENT SHALL CONFORM TO CURRENT EDITION OF THE MANUAL OF UNIFORM TRAFFIC CONTROL DEVICES (MUTCD) PUBLISHED BY THE US DEPARTMENT OF TRANSPORTATION FEDERAL HIGHWAY ADMINISTRATION.
6. EXISTING UTILITY LOCATIONS SHOWN ON THE DRAWINGS ARE APPROXIMATE. VERIFY ALL UTILITY LOCATIONS PRIOR TO EXCAVATION. THE CONTRACTOR SHALL BE RESPONSIBLE FOR FIELD VERIFYING THE HORIZONTAL AND VERTICAL LOCATIONS OF ALL ENCOUNTERED UTILITIES AND NOTING ANY CHANGES ON THE RECORD DRAWINGS.
7. ALL DISTURBED PROPERTY SHALL BE RESTORED TO PRE-CONSTRUCTION CONDITIONS AFTER IMPROVEMENTS ARE CONSTRUCTED.
8. "OR APPROVED EQUAL" IS ALWAYS IMPLIED AFTER A BRAND NAME, PATENTED PROCESS OR CATALOG NUMBER. ANY BRAND OR PROCESS APPROVED BY THE RESPONSIBLE REGISTERED PROFESSIONAL MAY BE SUBSTITUTED. THE ONLY EXCEPTION IS WHERE "NO SUBSTITUTION" IS SPECIFIED.
9. CONTRACTOR SHALL DISPOSE OF ALL CLEAN UNUSABLE FILL MATERIAL AT THE HUSLIA LANDFILL. COORDINATE EXACT DISPOSAL LOCATION WITH LANDFILL OPERATOR.

RECOMMENDED WATER JUMPER LINE CONSTRUCTION SEQUENCE:

THE INTENT IS TO MINIMIZE WATER SERVICE DISRUPTIONS TO HOMES DURING CONSTRUCTION WHILE MAINTAINING PUBLIC SAFETY. THIS IS A SUGGESTED SEQUENCE ONLY. OTHER METHODS THAT ACHIEVE THE SAME RESULT MAY BE DETERMINED BY THE FIELD CREW.

WATER JUMPER LINE CONSTRUCTION IS TO BE ACCOMPLISHED DURING THE SUMMER WHEN CIRCULATION IS NOT REQUIRED.

FOR EACH CONNECTION TIE-IN LOCATION (4 TYPICAL):

1. NOTIFY AFFECTED RESIDENTS A MINIMUM 48 HOURS IN ADVANCE OF WATER OUTAGE, AND ANTICIPATED LENGTH OF THE OUTAGE.
2. LOCATE AND CLOSE THE EXISTING WATER ISOLATION VALVES UPSTREAM AND DOWNSTREAM OF THE CONNECTION TIE-IN.
3. BLEED OFF THE SYSTEM PRESSURE BY OPENING A FAUCET IN ONE OR MORE HOMES.
4. TAP THE EXISTING MAIN AT THE TIE-IN LOCATION AND DRAIN IT.
5. CUT OUT THE SECTION OF MAIN WHERE THE TIE-IN WILL BE INSTALLED AND TEMPORARILY CAP THE ENDS OF THE MAIN TO PREVENT ANY DEBRIS FROM ENTERING THE PIPES.
6. DISINFECT THE NEW JUMPER LINE TIE-IN ASSEMBLIES IN ACCORDANCE WITH AWWA C651.
7. INSTALL TIE-IN ASSEMBLY USING VICTAULIC COUPLINGS.
8. OPEN VALVE ON THE JUMPER LINE LEG; AND PARTIALLY OPEN THE UPSTREAM AND DOWNSTREAM ISOLATION VALVES TO FLUSH THE MAIN AND JUMPER ASSEMBLY. A SYSTEM PRESSURE OF AT LEAST 20 PSI MUST BE MAINTAINED IN THE MAINS.
9. CLOSE THE JUMPER LINE VALVE AND FULLY OPEN THE ISOLATION VALVES TO RESUME NORMAL FLOW.

AFTER THE TWO TIE-IN ASSEMBLIES HAVE BEEN INSTALLED, PROCEED WITH INSTALLATION OF THE CORRESPONDING JUMPER LINE BETWEEN THE TWO ASSEMBLIES.

1. INSTALL JUMPER LINE BETWEEN THE TWO CLOSED JUMPER VALVES AT DESIGNATED LOCATION AND GRADE IN ACCORDANCE WITH THE DRAWINGS.
2. INSTALL ROMAC 306-H, 6"x2" TAPPING SADDLES AT EACH END OF THE JUMPER LINE TO FACILITATE IN PRESSURE TESTING, FLUSHING, DISINFECTION, AND DRAINING THE PIPE SEGMENT.
3. FLUSH THE JUMPER LINE.
4. PRESSURE TEST JUMPER LINE.
5. DISINFECT JUMPER LINE IN ACCORDANCE WITH AWWA C651.
6. DE-CHLORINATE WATER USED TO DISINFECT AND DISCARD INTO THE SEWER.
7. FLUSH JUMPER LINE TO REMOVE CONCENTRATED CHLORINE.
8. OBTAIN BAC-T SAMPLES FROM DOWNSTREAM END OF JUMPER LINE AND SHIP TO FAIRBANKS FOR TESTING.
9. ONLY WHEN BAC-T SAMPLE IS REPORTED AS NEGATIVE. PROCEED WITH NEXT STEP.
10. E-MAIL ADEC WITH TEST RESULTS FOR NEW JUMPER LINE AND REQUEST INTERIM APPROVAL TO OPERATE. MAIL HARD COPY OF TEST RESULTS TO ADEC.
11. AFTER RECEIVING ADEC APPROVAL, DRAIN THE JUMPER LINE AND INSTALL PLUGS IN THE ROMAC 306-H, 6"x2" TAPPING SADDLES. PUMP AND DISCARD ANY DISCHARGED WATER FROM THE EXCAVATION TRENCH.
12. ENSURE THAT JUMPER LINE VALVES ARE CLOSED.
13. REPEAT THE SEQUENCE ABOVE FOR EACH JUMPER LINE.

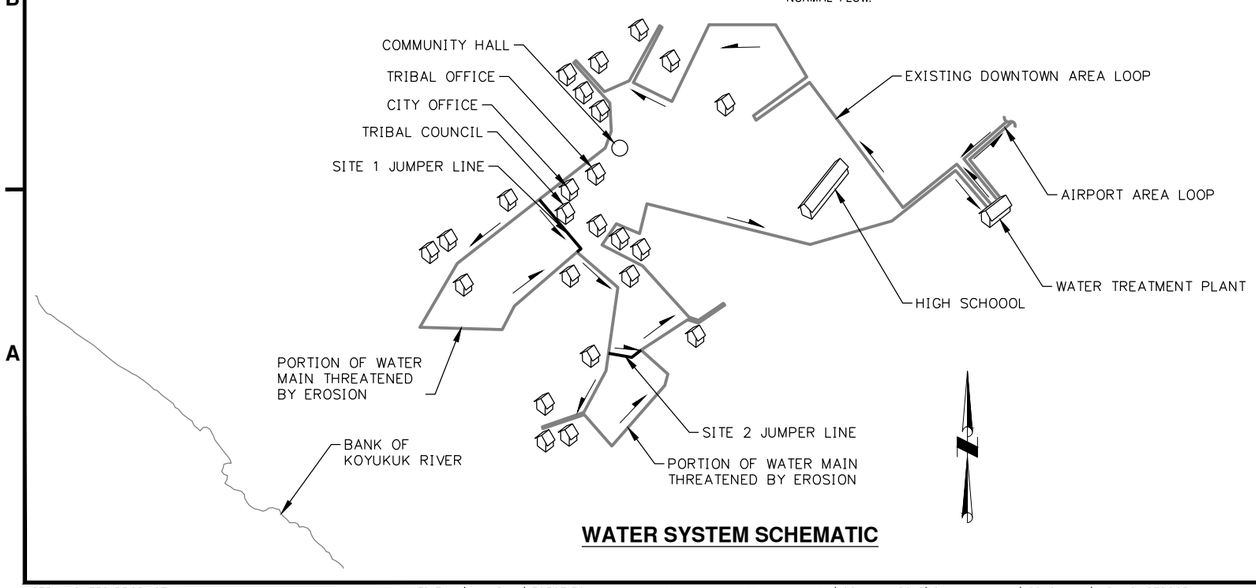

WATER SYSTEM SCHEMATIC

Division of Environmental Health and Engineering
4500 Diplomacy Drive
Anchorage, Alaska 99508
(907) 729-3600

STATE OF ALASKA 49TH David W. Diller CE-8822 03/25/20 REGISTERED PROFESSIONAL ENGINEER

0 1"
BAR IS ONE INCH ON ORIGINAL DRAWING, IF NOT ADJUST SCALES ACCORDINGLY

HUSLIA, AK EROSION MITIGATION WATER SYSTEM MODIFICATIONS ISSUED FOR AGENCY REVIEW

MRK	DATE	DESCRIPTION	INIT

PLAN SET:	HSL-19-007
PROJ MGR:	JVS
PROJ ENG:	DWD
DRUMS ENG:	XXX
DRAWN BY:	KEG

SHEET TITLE

SCOPE OF WORK AND DESIGN CRITERIA

G-003

SHEET 3 OF 4

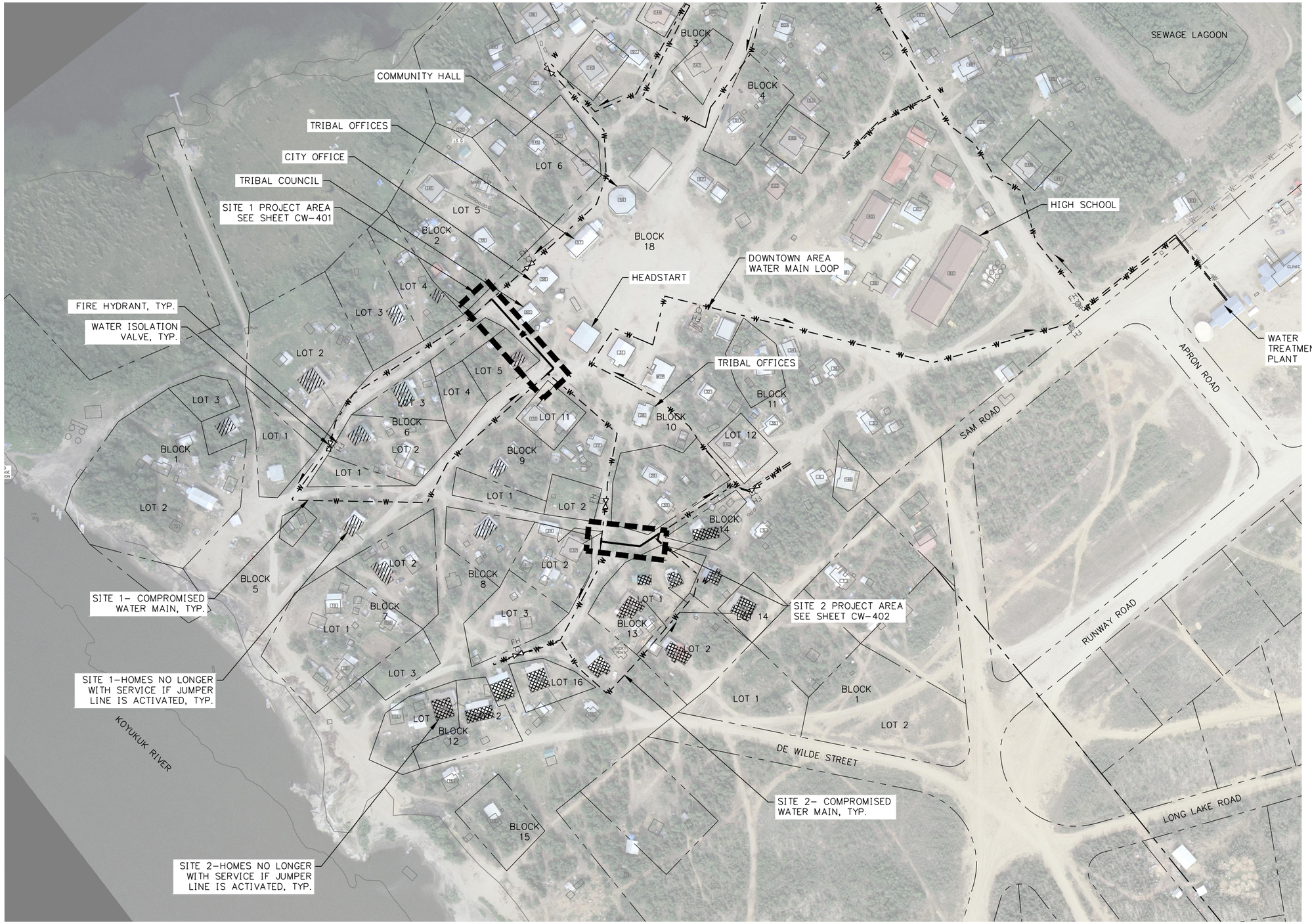

A1 COMMUNITY SITE PLAN AND WATER MAINS

SCALE: 1" : 100'

Division of Environmental Health and Engineering
4500 Diplomacy Drive
Anchorage, Alaska 99508
(907) 729-3600

STATE OF ALASKA 49TH
David W. Diller
CE-8822
03/25/20
REGISTERED PROFESSIONAL ENGINEER

0 1"
BAR IS ONE INCH ON ORIGINAL DRAWING, IF NOT ADJUST SCALES ACCORDINGLY

HUSLIA, AK
EROSION MITIGATION
WATER SYSTEM MODIFICATIONS
ISSUED FOR AGENCY REVIEW

MRK	DATE	DESCRIPTION	INIT

PLAN SET:	HSL-19-007
PROJ MGR:	JVS
PROJ ENG:	DWD
DRUMS ENG:	XXX
DRAWN BY:	KEB

SHEET TITLE

COMMUNITY SITE PLAN AND WATER MAINS

G-004

SHEET 4 OF 4

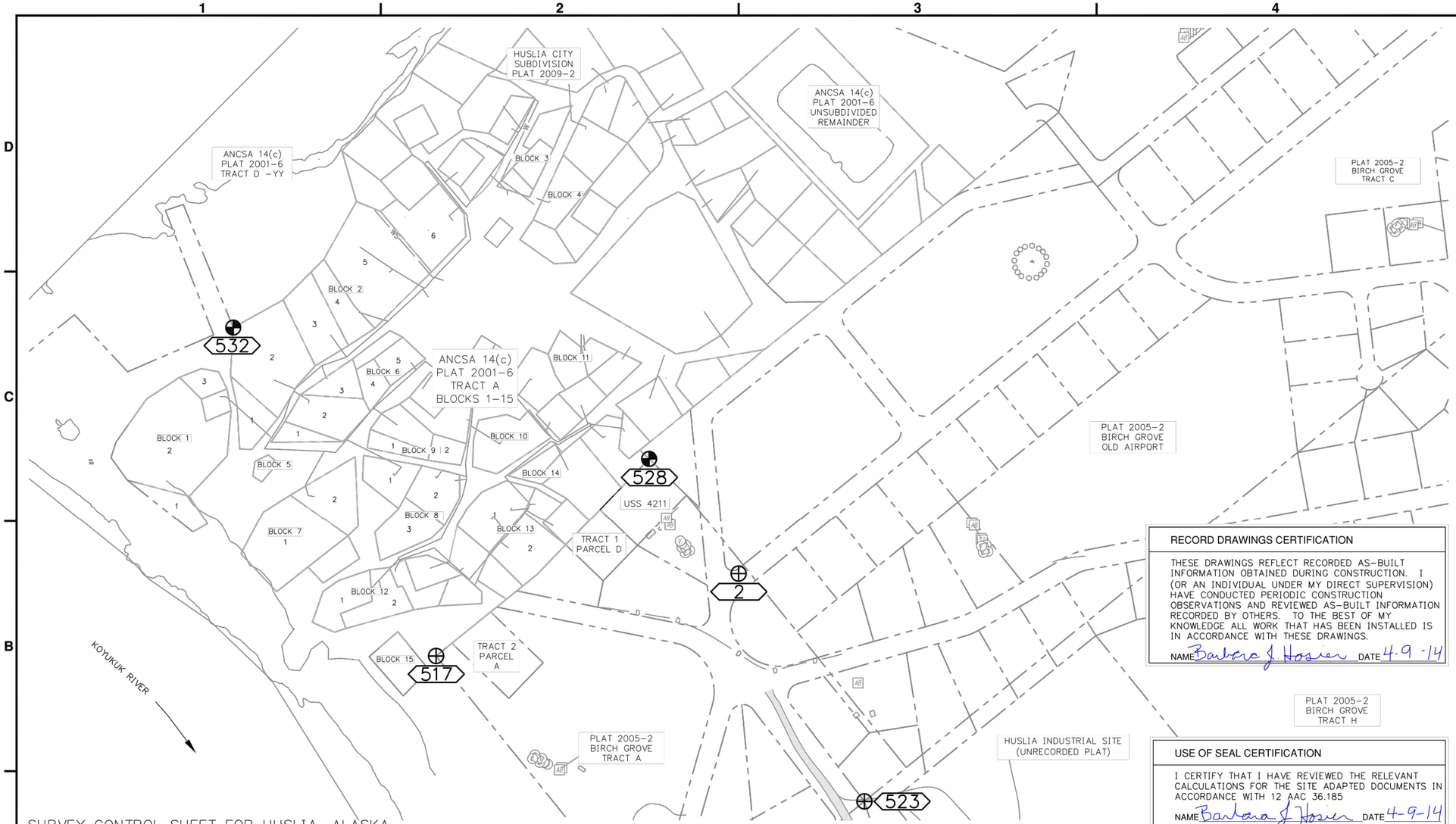

SURVEY CONTROL SHEET FOR HUSLIA, ALASKA

NOTES:

THIS MAP WAS PREPARED BASED ON ORIGINAL AERIAL PHOTOGRAPHY ACQUIRED BY AEROMAP FOR ASCG, INC ON BEHALF OF ANTHC ON 5-31-1995 & 7-25-1995. THE DIGITAL REPRESENTATION OF HUSLIA HAD BEEN CREATED IN METERS. ANTHC CONVERTED THIS REPRESENTATION TO FEET.

US SURVEYS, SUBDIVISIONS, AND OTHER LAND BOUNDARIES ARE SHOWN FOR GRAPHICAL PURPOSES ONLY.

HORIZONTAL AND VERTICAL CONTROL

BASIS OF HORIZONTAL AND VERTICAL CONTROL WERE ESTABLISHED BY ANTHC USING A WGS 84 DATUM APPLYING THE 1999 ALASKA GEOID. THE BASIS OF OUR CONTROL NETWORK, CONTROL POINT #2, IS LOCATED NEAR THE INTERSECTION OF RUNWAY ROAD AND AIRPORT ROAD IN AN OPEN FIELD.

HORIZONTAL CONTROL

HORIZONTAL COORDINATES FOR THIS PROJECT ARE A LOCAL GPS DERIVED COORDINATE SYSTEM.

COORDINATES OF N=49677.980, E=51961.124 WERE ASSIGNED TO CONTROL POINT 2(2" ALUMINUM CAP) AS EXPRESSED IN U.S. SURVEY FEET.

VERTICAL CONTROL

AN ASSUMED GPS DERIVED VERTICAL DATUM OF 156.364', ESTABLISHED FROM MEASUREMENTS TAKEN BY ANTHC AT CONTROL POINT 2

SURVEY CONTROL

POINT #	NORTHING	EASTING	ELEVATION	DESCRIPTION
	LOCAL COORDINATE SYSTEM			
2	49,667.98	51,961.124	156.364	ALUMINUM CAP
517	49,417.978	50,041.936	154.598	ALUMINUM CAP
523	48,976.640	52,343.323	158.647	ALUMINUM CAP
528	50,018.116	51,689.347	153.807	BRASS CAP
532	50,417.212	50,425.697	131.036	BRASS CAP

0 150' 300' 200'

RECORD DRAWINGS CERTIFICATION

THESE DRAWINGS REFLECT RECORDED AS-BUILT INFORMATION OBTAINED DURING CONSTRUCTION. I (OR AN INDIVIDUAL UNDER MY DIRECT SUPERVISION) HAVE CONDUCTED PERIODIC CONSTRUCTION OBSERVATIONS AND REVIEWED AS-BUILT INFORMATION RECORDED BY OTHERS. TO THE BEST OF MY KNOWLEDGE ALL WORK THAT HAS BEEN INSTALLED IS IN ACCORDANCE WITH THESE DRAWINGS.

NAME Barbara J. Hosier DATE 4-9-14

USE OF SEAL CERTIFICATION

I CERTIFY THAT I HAVE REVIEWED THE RELEVANT CALCULATIONS FOR THE SITE ADAPTED DOCUMENTS IN ACCORDANCE WITH 12 AAC 36.185

NAME Barbara J. Hosier DATE 4-9-14

BARBARA HOSIER LS-8623

MRK	DATE	DESCRIPTION	INIT

PLAN SET:	HSL-07-002
PROJ MGR:	DMC
PROJ ENG:	JFH, P.E.
DRUMS ENG:	PMC, P.E.
DRAWN BY:	LAM

SHEET TITLE

SURVEY CONTROL

V-101

SHEET 6 OF 34

Division of Environmental Health and Engineering
3900 Ambassador Drive, Suite 301
Anchorage, Alaska 99508
(907) 729-3600

STATE OF ALASKA 49TH David W. Diller CE-8822 03/25/20 REGISTERED PROFESSIONAL ENGINEER

STATE OF ALASKA 49TH BARBARA J. HOSIER LS-8623 4-9-14 REGISTERED PROFESSIONAL LAND SURVEYOR

0 1"

BAR IS ONE INCH ON ORIGINAL DRAWING, IF NOT ADJUST SCALES ACCORDINGLY

HUSLIA, AK
WATER DISTRIBUTION
IMPROVEMENTS
RECORD AS-BUILTS

Division of Environmental Health and Engineering
4500 Diplomacy Drive
Anchorage, Alaska 99508
(907) 729-3600

0 1"

BAR IS ONE INCH ON ORIGINAL DRAWING, IF NOT ADJUST SCALES ACCORDINGLY

HUSLIA, AK
EROSION MITIGATION
WATER SYSTEM MODIFICATIONS
ISSUED FOR AGENCY REVIEW

MRK	DATE	DESCRIPTION	INIT

PLAN SET:	HSL-19-007
PROJ MGR:	JVS
PROJ ENG:	DWD
DRUMS ENG:	XXX
DRAWN BY:	KEG

SHEET TITLE

SITE CONTROL

V-101

SHEET 1 OF 2

NOTES:

1. BEARINGS AND DISTANCES SHOWN ARE BASED UPON RECORD INFORMATION PER PLAT 2009-2, HUSLIA CITY SUBDIVISION AND PLAT 2001-6, ANCSA 14(c) SURVEY. NULATO RECORDING DISTRICT.
2. BUILDINGS AND UTILITIES ARE SHOWN FOR GRAPHICAL PURPOSES ONLY.

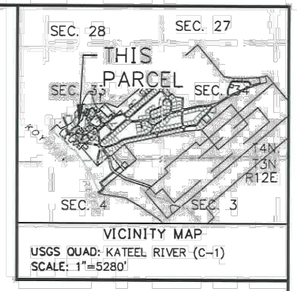

VICINITY MAP
USGS QUAD: KATEEL RIVER (C-1)
SCALE: 1"=5280'

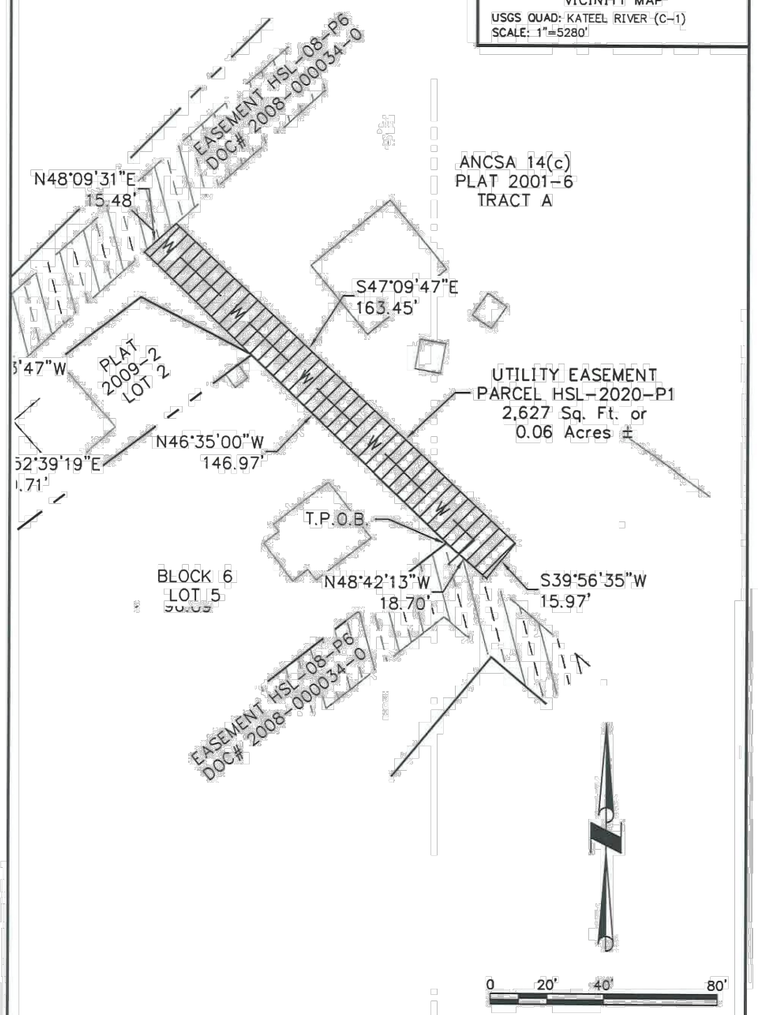

Alaska Native Tribal Health Consortium Division of Environmental Health and Engineering 3900 Ambassador Drive, Suite 301 Anchorage, Alaska 99508 (907) 729-3600	EXHIBIT: HSL-2020-E1	COMMUNITY: HUSLIA, ALASKA
	PARCEL # HSL-2020-P1	DATE: 02/12/2020
	RECORDING DISTRICT: NULATO	PAGE 4 OF 4

A1 EASEMENT-SITE 1

Scale: 1" = 30'

NOTE

1. THE EASEMENT DOCUMENTS ARE IN THE PROCESS OF BEING SIGNED. ONCE SIGNED THEY WILL BE RECORDED IN THE NULATO RECORDING DISTRICT THROUGH THE FAIRBANKS RECORDER'S OFFICE.

NOTES:

1. BEARINGS AND DISTANCES SHOWN ARE BASED UPON RECORD INFORMATION PER PLAT 2001-6, ANCSA 14(c) SURVEY. NULATO RECORDING DISTRICT.
2. BUILDINGS AND UTILITIES ARE SHOWN FOR GRAPHICAL PURPOSES ONLY.

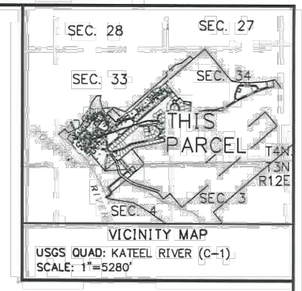

VICINITY MAP
USGS QUAD: KATEEL RIVER (C-1)
SCALE: 1"=5280'

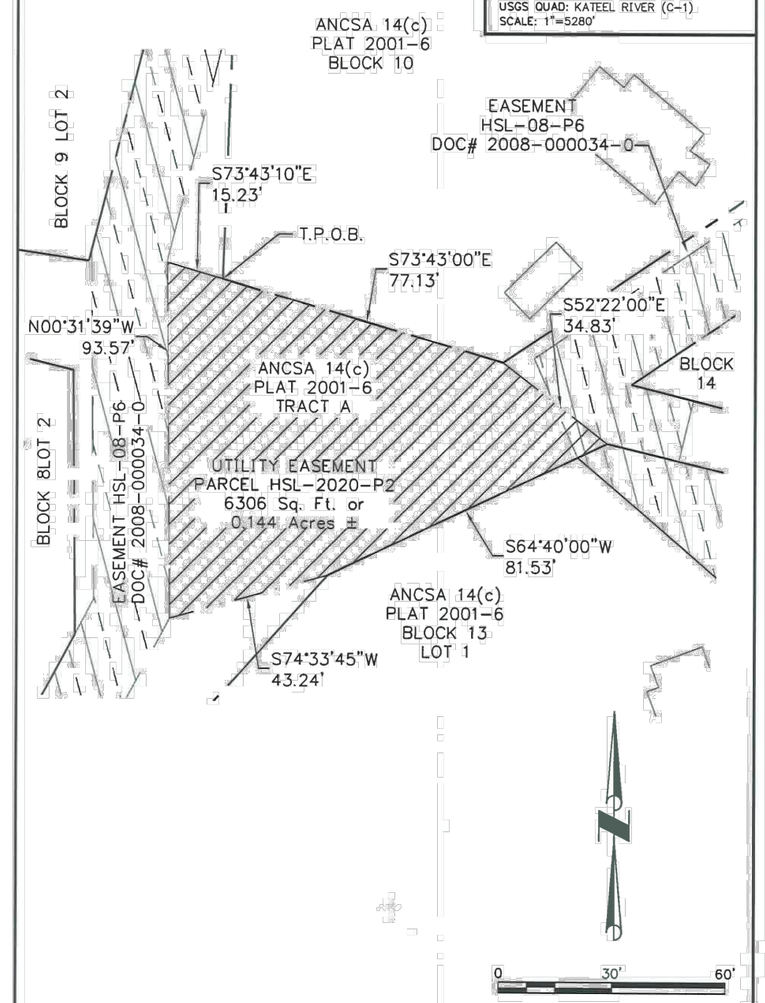

Alaska Native Tribal Health Consortium Division of Environmental Health and Engineering 3900 Ambassador Drive, Suite 301 Anchorage, Alaska 99508 (907) 729-3600	EXHIBIT: HSL-2020-E2	COMMUNITY: HUSLIA, ALASKA
	PARCEL # HSL-2020-P2	DATE: 02/XX/2020
	RECORDING DISTRICT: NULATO	PAGE 4 OF 4

A3 EASEMENT - SITE 2

Scale: 1" = 30'

Division of Environmental Health and Engineering
4500 Diplomacy Drive
Anchorage, Alaska 99508
(907) 729-3600

STATE OF ALASKA 49TH David W. Diller CE-8822 03/25/20 REGISTERED PROFESSIONAL ENGINEER

0 1"
BAR IS ONE INCH ON ORIGINAL DRAWING, IF NOT ADJUST SCALES ACCORDINGLY

HUSLIA, AK
EROSION MITIGATION
WATER SYSTEM MODIFICATIONS
ISSUED FOR AGENCY REVIEW

MRK	DATE	DESCRIPTION	INIT

PLAN SET:	HSL-19-007
PROJ MGR:	JVS
PROJ ENG:	DWD
DRUMS ENG:	XXX
DRAWN BY:	KEG

SHEET TITLE

RIGHT-OF-WAY

V-102

SHEET 2 OF 2

SANITARY SEWER

- SEWER MANHOLE
- CLEANOUT
- SEPTIC VENT
- SEWER LIFT STATION
- SEPTIC TANK
- ARCTIC BOX
- SEWER VALVE VAULT

POWER AND COMMUNICATION

- LIGHT POLE
- POWER POLE
- ELECTRIC PED
- ELECTRIC METER
- ELECTRIC TRANSFORMER
- THERMISTOR
- TELEPHONE PEDESTAL
- TELEPHONE BOOTH
- CABLE PED
- ANTENNA
- ELECTRICAL VAULT
- FUEL POWERED GENERATOR
- HYDRO POWERED GENERATOR
- WIND POWERED GENERATOR
- STREET LIGHT

WATER

- HYDRANT
- WATER VALVE
- WATER WELL
- WATER MANHOLE
- WATER VALVE VAULT
- THAW PORT
- CONTROL VALVE
- AIR RELIEF VALVE
- EXPANSION JOINT

SITE STRUCTURES

- BOLLARD
- FUEL TANK
- PROPANE TANK
- GATE POST
- MONITOR WELL
- THERMOSYPHON
- SIGN
- CATCH BASIN
- PULL BOX

TOPO AND VEGETATION

- SLOPE ARROW
- TEST HOLE
- DRAINAGE CHANNEL
- SITE DRAINAGE
- WATER ELEVATION
- RIP RAP
- STRAW BALE
- GRAVEL
- ROAD OR DRIVEWAY
- BUSH/TREE LIMIT

LINE LABELS

WATER

- WATER MAIN PROPOSED
- WATER MAIN EXISTING
- WS — WATER SERVICE

SANITARY SEWER

- S — GRAVITY SEWER MAIN
- SS — SEWER SERVICE
- FM — SEWER FORCE MAIN
- CULVERT

TOPOGRAPHY AND VEGETATION

- 220 — MAJOR CONTOUR
- 219 — MINOR CONTOUR

POWER AND COMMUNICATION

- CATV — CABLE TV BURIED
- G — GAS LINE
- FO — FIBEROPTIC BURIED
- P — POWER LINE
- T — TELEPHONE BURIED
- OH/E — OVERHEAD ELECTRIC
- C — COMMUNICATION CONDUIT

SITE

- X — FENCE LINE
- O — SILT FENCE LINE

ABBREVIATIONS

BVC	BEGINNING OF VERTICAL CURVE
EVC	END OF VERTICAL CURVE
LVC	LENGTH OF VERTICAL CURVE
NE	NORTHEAST
OHE	OVERHEAD ELECTRIC
PC	POINT OF CURVATURE
PI	POINT OF INTERSECTION
PT	POINT OF TANGENCY
PVI	POINT OF VERTICAL INTERSECTION
STA	STATION
SW	SOUTHWEST
UGC	UNDERGROUND CONDUIT

WATER NOTES

1. ALL COMPONENTS IN CONTACT WITH POTABLE WATER SHALL BE NSF APPROVED OR CONSTRUCTED OF NSF CERTIFIED MATERIALS AND BE LEAD-FREE. ALL SOLDER AND FLUX SHALL BE LEAD-FREE.
2. CUSTOMERS SHALL BE NOTIFIED AT LEAST 48-HOURS IN ADVANCE OF ANY PLANNED SERVICE INTERRUPTIONS.
3. ACCORDING TO THE HUSLIA, AK WATER DISTRIBUTION IMPROVEMENTS RECORD AS-BUILT DRAWINGS (ANTHC PROJECT NUMBER AN-05-R95):
   - FIRE HYDRANTS ARE 6" MUELLER A-423 FLUSH HYDRANT WITH FLANGE SIDE AND SHUT OFF VALVE.
   - ISOLATION VALVES ARE 6" HDPE FULL BORE BALL VALVES, BUTT FUSED TO THE MAIN.

SEPARATION OF WATER AND SEWER MAINS

1. EXCEPT AT PIPE CROSSINGS, WATER MAINS SHALL BE LAID AT LEAST TEN (10) FEET HORIZONTALLY FROM ANY EXISTING OR PROPOSED SEWER MAINS, FORCE MAINS OR SEPTIC TANK ABSORPTION FIELD TRENCHES. THE DISTANCE SHALL BE MEASURED EDGE TO EDGE.
2. WATER MAINS CROSSING SEWERS SHALL BE LAID TO PROVIDE A MINIMUM VERTICAL DISTANCE OF EIGHTEEN (18) INCHES BETWEEN THE OUTSIDE OF THE WATER MAIN AND THE OUTSIDE OF THE SEWER MAIN. THIS SHALL APPLY WHETHER THE WATER MAIN IS EITHER ABOVE OR BELOW THE SEWER. AT CROSSINGS, ONE FULL LENGTH OF WATER PIPE AND ONE FULL LENGTH OF SEWER PIPE SHALL BE LOCATED SO BOTH JOINTS ON BOTH PIPES ARE AS FAR FROM THE CROSSING AS POSSIBLE. THIS REQUIREMENT SHALL APPLY TO PUSH-ON, FUSED AND WELDED JOINTS DUE TO THE POTENTIAL FOR JOINT FAILURE.
3. THE 18-INCH VERTICAL SEPARATION OR 10-FOOT HORIZONTAL SEPARATION DISTANCE DOES NOT APPLY TO WATER AND SEWER SERVICES CROSSING MAIN LINES. HOWEVER, THE PROJECT SUPERINTENDENT SHALL ATTEMPT TO PROVIDE THESE VERTICAL AND HORIZONTAL SEPARATION DISTANCES OF SERVICES FROM WATER AND SEWER MAINS WHENEVER POSSIBLE. WATER AND SEWER SERVICE LINES SHALL BE SEPARATED BY A DISTANCE OF 5' HORIZONTALLY UNLESS THE WATER SERVICE IS LOCATED A MINIMUM OF 12" ABOVE THE SEWER SERVICE AND HDPE PIPE IS USED FOR SEWER SERVICE CONSTRUCTION.

811 Call before you dig.

CALL BEFORE YOU DIG

WATER & SEWER - CITY OF HUSLIA (907)829-2266

CABLE & TELEPHONE - ACS 811

ELECTRIC - AVEC 811

Division of Environmental Health and Engineering
4500 Diplomacy Drive
Anchorage, Alaska 99508
(907) 729-3600

STATE OF ALASKA 49TH David W. Diller CE-8822 03/25/20 REGISTERED PROFESSIONAL ENGINEER

0 1"
BAR IS ONE INCH ON ORIGINAL DRAWING, IF NOT ADJUST SCALES ACCORDINGLY

HUSLIA, AK
EROSION MITIGATION
WATER SYSTEM MODIFICATIONS
ISSUED FOR AGENCY REVIEW

MRK	DATE	DESCRIPTION	INIT

PLAN SET:	HSL-19-007
PROJ MGR:	JVS
PROJ ENG:	DWD
DRUMS ENG:	XXX
DRAWN BY:	KEG

SHEET TITLE

CIVIL LEGEND AND ABBREVIATIONS

C-001

SHEET 1 OF 1

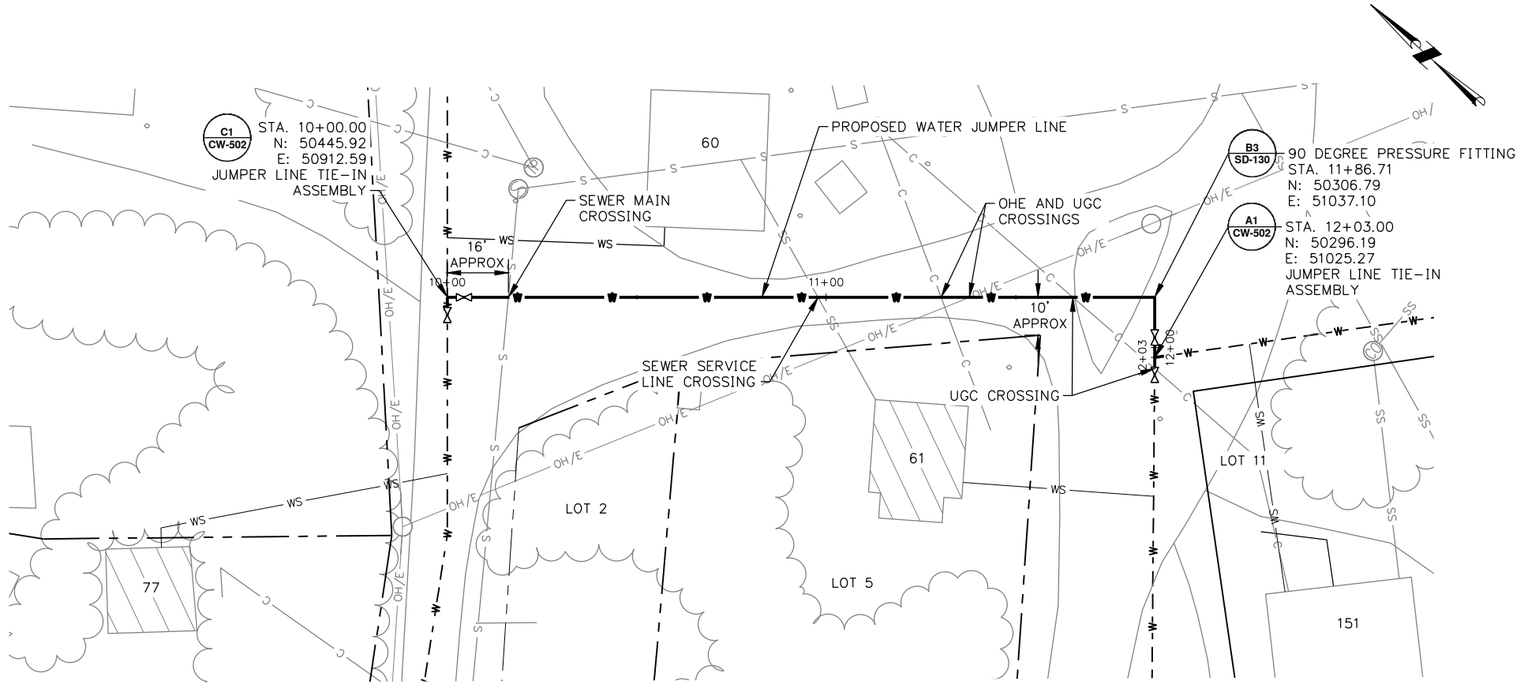

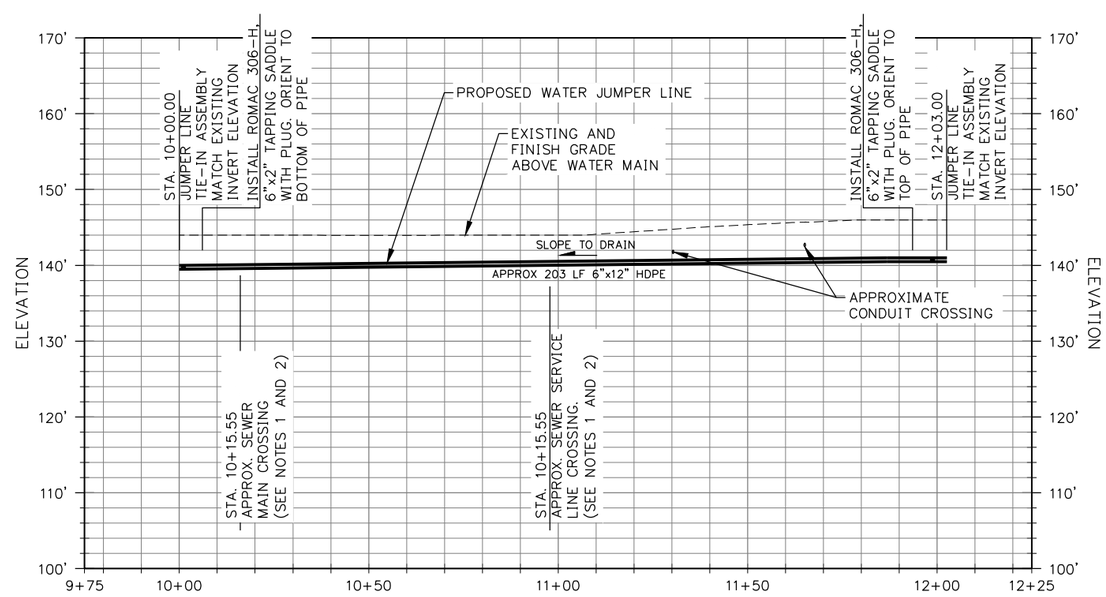

NOTES

1. FIELD LOCATE AND MEASURE DEPTH OF EXISTING UTILITIES PRIOR TO BEGINNING INSTALLATION OF THE WATER JUMPER LINE. ADJUST DEPTH OF WATER LINE AS REQUIRED TO MAINTAIN A MINIMUM VERTICAL SEPARATION DISTANCE OF 18" FROM THE SEWER LINES.
2. CENTER A 20 FT SECTION OF WATER MAIN OVER EACH SEWER CROSSING SO THE CLOSEST WATER MAIN JOINT TO THE SEWER MAINS IS A MINIMUM OF 10 FT FROM THE SEWER MAIN.

Division of Environmental Health and Engineering
4500 Diplomacy Drive
Anchorage, Alaska 99508
(907) 729-3600

STATE OF ALASKA 49TH
David W. Diller
CE-8822
03/25/20
REGISTERED PROFESSIONAL ENGINEER

0 1"
BAR IS ONE INCH ON ORIGINAL DRAWING, IF NOT ADJUST SCALES ACCORDINGLY

HUSLIA, AK
EROSION MITIGATION
WATER SYSTEM MODIFICATIONS
ISSUED FOR AGENCY REVIEW

MRK	DATE	DESCRIPTION	INIT

PLAN SET:	HSL-19-007
PROJ MGR:	JVS
PROJ ENG:	DWD
DRUMS ENG:	XXX
DRAWN BY:	KEG

SHEET TITLE

SITE 1 - WATER JUMPER LINE

CW-401

SHEET 1 OF 4

A1 SITE 1 - WATER JUMPER LINE

Scale: 1" = 20'

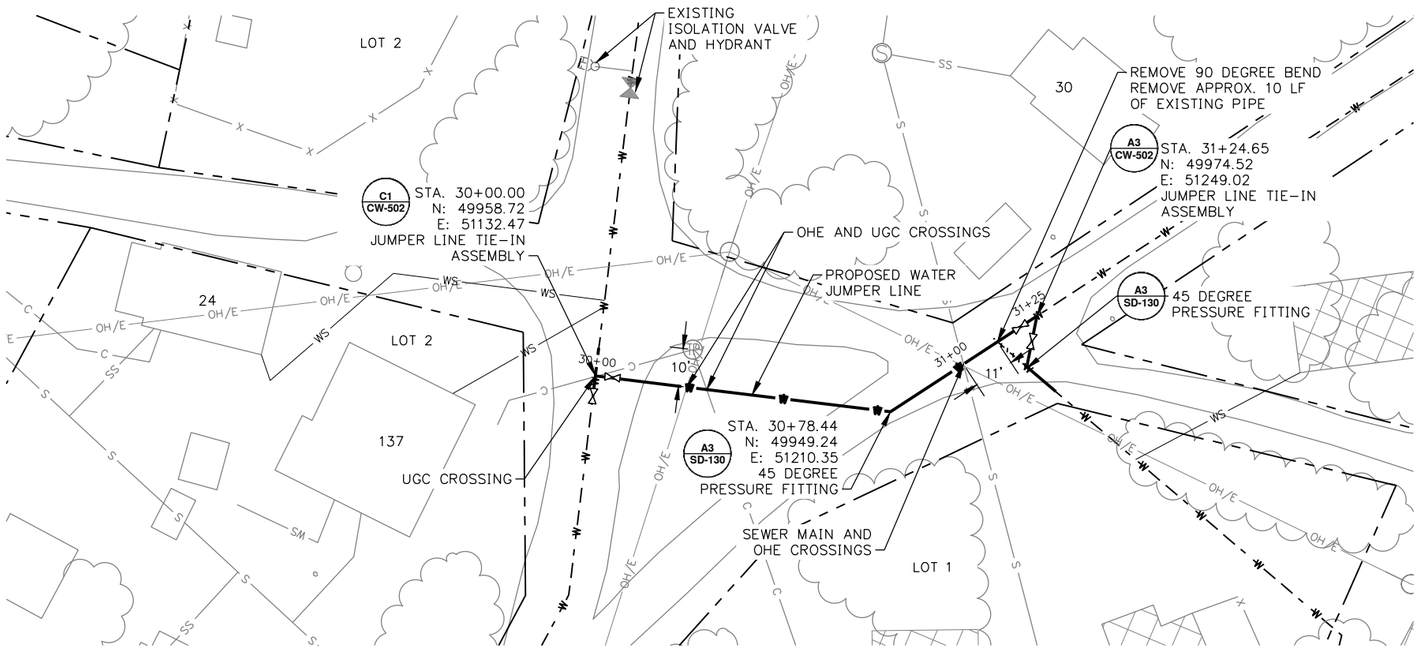

NOTES

1. FIELD LOCATE AND MEASURE DEPTH OF EXISTING UTILITIES PRIOR TO BEGINNING INSTALLATION OF THE WATER JUMPER LINE. ADJUST DEPTH OF WATER LINE AS REQUIRED TO MAINTAIN A MINIMUM VERTICAL SEPARATION DISTANCE OF 18" FROM THE SEWER LINES.

2. CENTER A 20 FT SECTION OF WATER MAIN OVER EACH SEWER CROSSING SO THE CLOSEST WATER MAIN JOINT TO THE SEWER MAINS IS A MINIMUM OF 10 FT FROM THE SEWER MAIN.

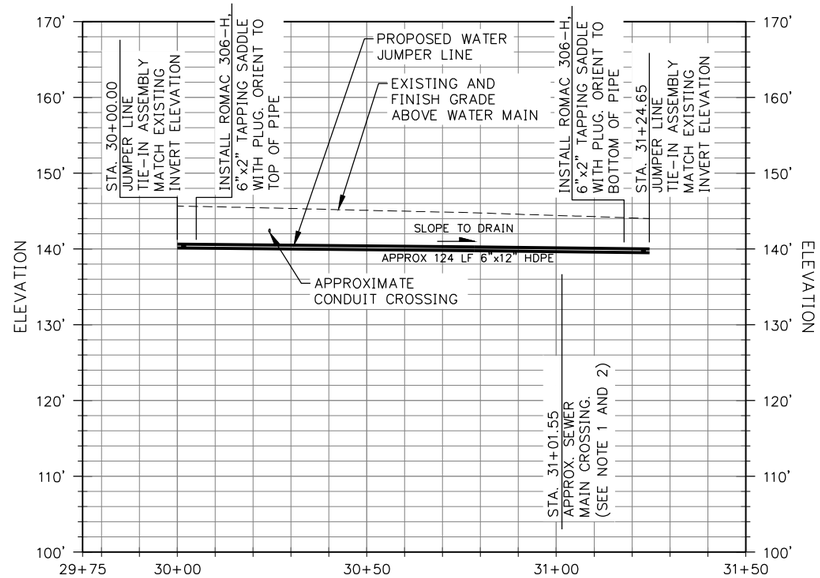

A1 **SITE 2 - WATER JUMPER LINE**

Scale: 1" = 20'

Division of Environmental Health and Engineering
4500 Diplomacy Drive
Anchorage, Alaska 99508
(907) 729-3600

STATE OF ALASKA 49 TH
David W. Diller
CE-8822
03/25/20
REGISTERED PROFESSIONAL ENGINEER

0 1"
BAR IS ONE INCH ON ORIGINAL DRAWING, IF NOT ADJUST SCALES ACCORDINGLY

HUSLIA, AK
EROSION MITIGATION
WATER SYSTEM MODIFICATIONS
ISSUED FOR AGENCY REVIEW

MRK	DATE	DESCRIPTION	INIT

PLAN SET:	HSL-19-007
PROJ MGR:	JVS
PROJ ENG:	DWD
DRUMS ENG:	XXX
DRAWN BY:	KEG

SHEET TITLE

SITE 2 - WATER JUMPER LINE

CW-402

SHEET 2 OF 4

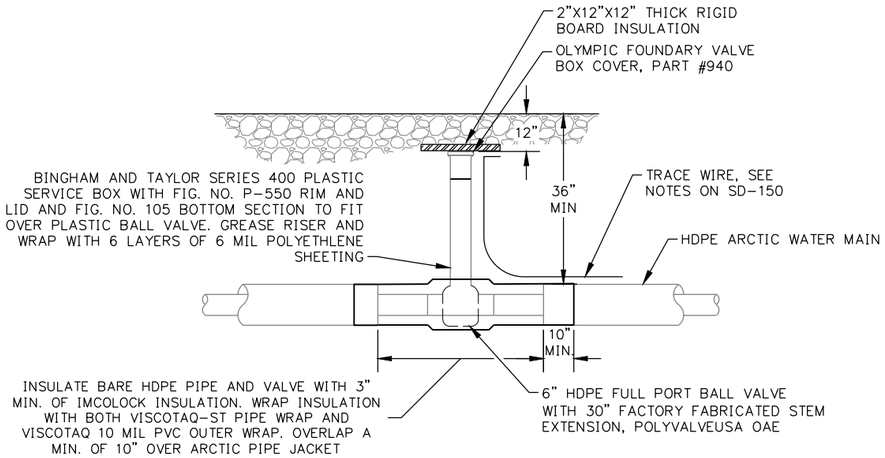

C1 WATER MAIN VALVE

NTS

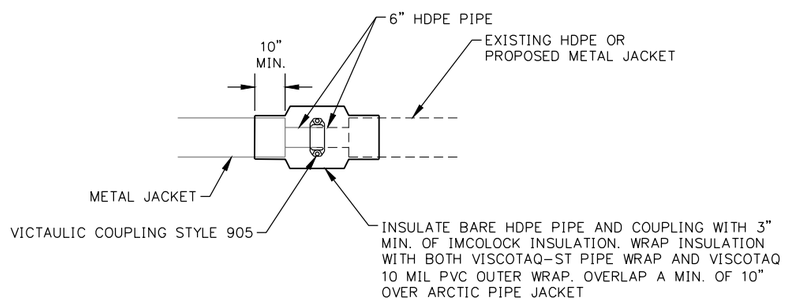

B1 ARCTIC PRESSURE PIPE CONNECTION - WITH VICTAULIC COUPLING

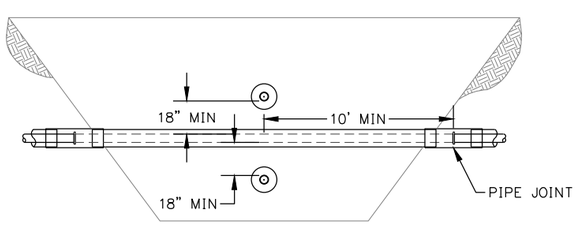

A1 WATER AND SEWER MAIN CROSSING

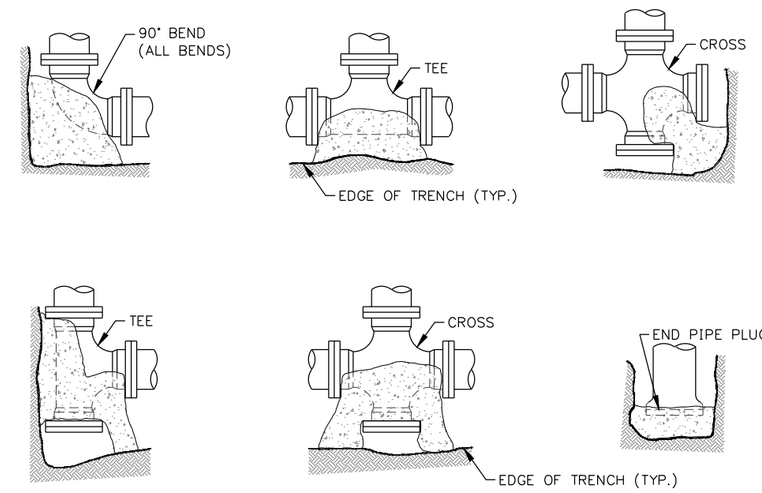

MINIMUM BASE AREA SQUARE FEET				
PIPE SIZE	PLUG	90° BEND	45° BEND	22 1/2° BEND
6"	2.0	2.0	1	1
8"	2.5	2.5	1.5	1.5
10"	4.5	4.5	2.5	2.5
12"	6	6	3.5	3.5
14"	8	8	4.5	4.5
16"	10.5	10.5	6	6
24"	24	24	13	13

NOTES:

1. MINIMUM THICKNESS OF PRE-CAST CONCRETE THRUST BLOCKS SHALL BE 6-INCH OR PER THE CONTRACT SPECIFICATIONS, AND IN CONFORMANCE WITH DIVISION 30.
2. THRUST BLOCK MAY NOT BE USED IN LIEU OF THRUST RESTRAINT.
3. THRUST BLOCK CAST AGAINST UNDISTURBED SOIL (HATCH).

A3 THRUST BLOCK DETAILS

Division of Environmental Health and Engineering
4500 Diplomacy Drive
Anchorage, Alaska 99508
(907) 729-3600

STATE OF ALASKA 49TH David W. Diller CE-8822 03/25/20 REGISTERED PROFESSIONAL ENGINEER

0 1"
BAR IS ONE INCH ON ORIGINAL DRAWING, IF NOT ADJUST SCALES ACCORDINGLY

HUSLIA, AK
EROSION MITIGATION
WATER SYSTEM MODIFICATIONS
ISSUED FOR AGENCY REVIEW

MRK	DATE	DESCRIPTION	INIT

PLAN SET:	HSL-19-007
PROJ MGR:	JVS
PROJ ENG:	DWD
DRUMS ENG:	XXX
DRAWN BY:	KEG

SHEET TITLE

MISC. PIPING DETAILS

CW-501

SHEET 3 OF 4

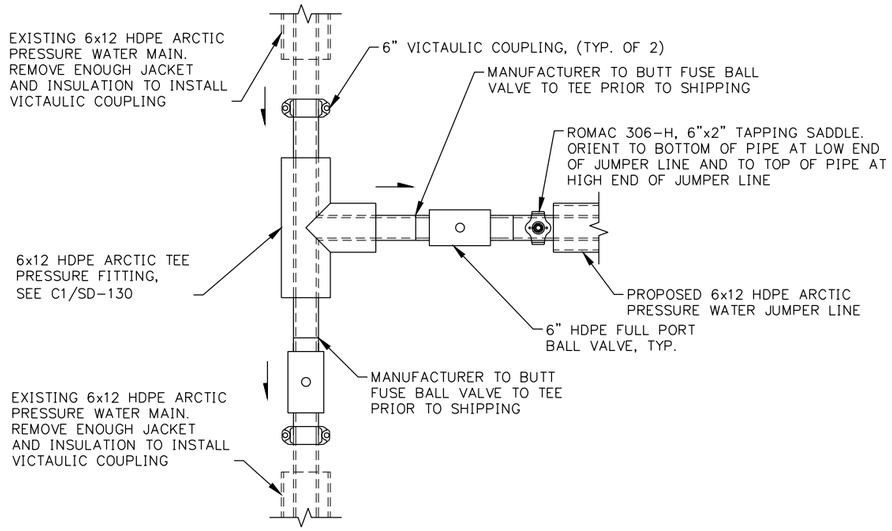

C1 JUMPER LINE TIE-IN ASSEMBLY SITE 1 - STA. 10+00.00 & SITE 2 - STA. 30+00.00

NTS

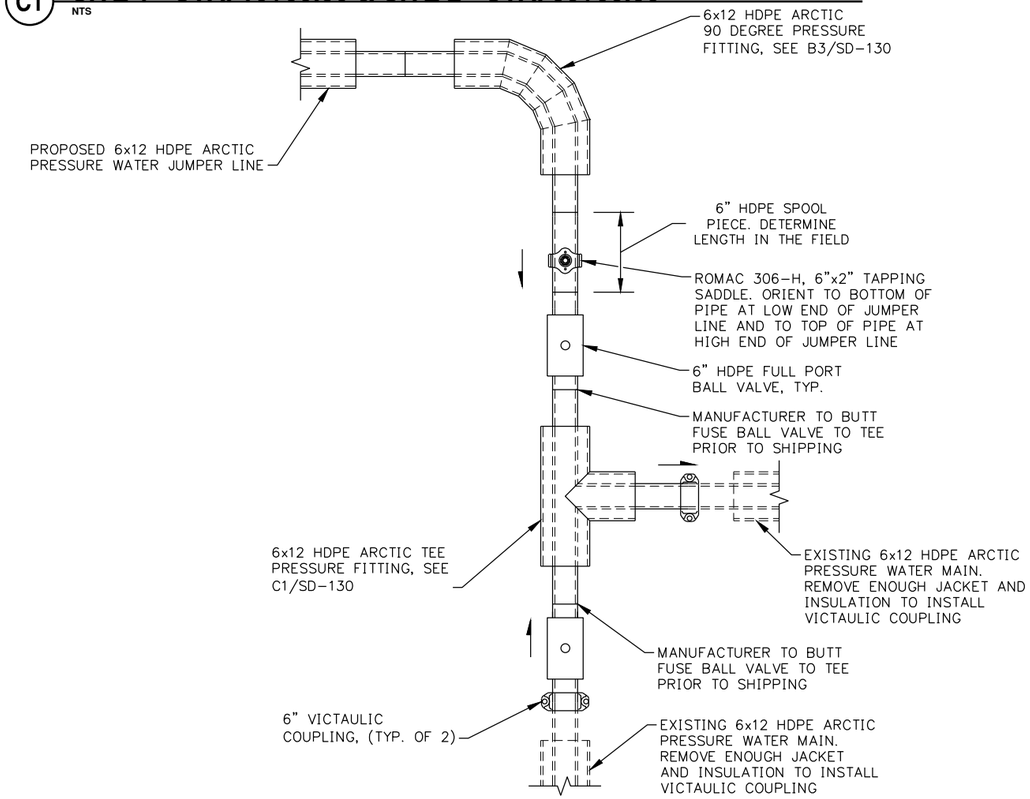

A1 JUMPER LINE TIE-IN ASSEMBLY SITE 1 - STA. 12+03.00

NTS

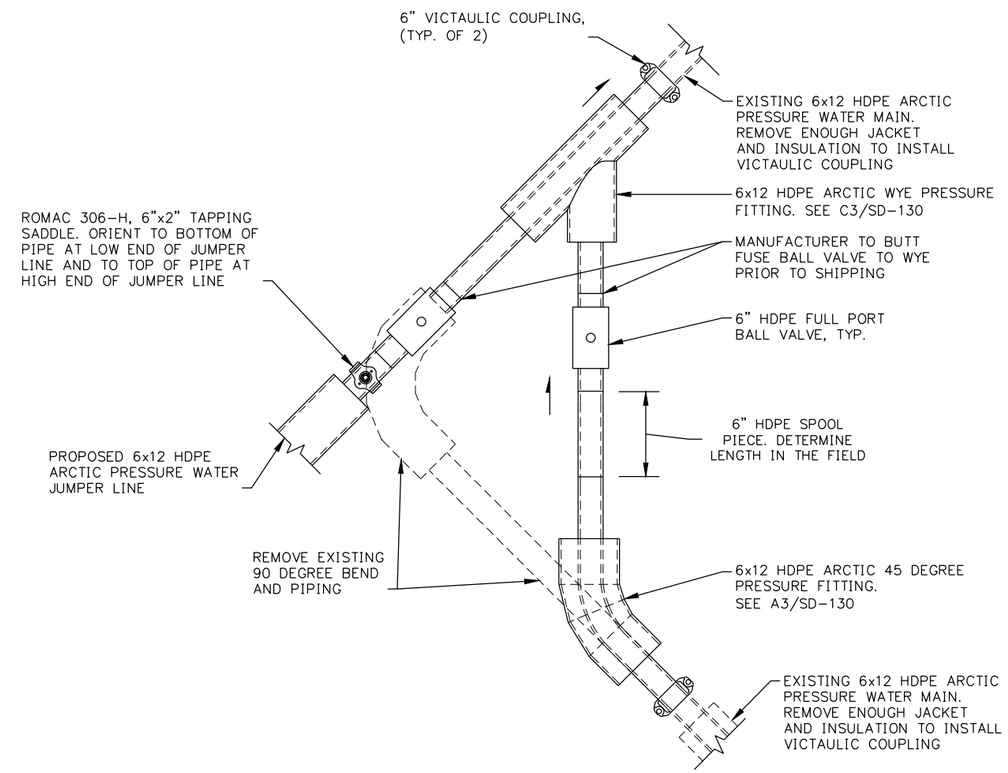

A3 JUMPER LINE TIE-IN ASSEMBLY SITE 2 - STA. 31+24.35

NTS

Division of Environmental Health and Engineering
4500 Diplomacy Drive
Anchorage, Alaska 99508
(907) 729-3600

STATE OF ALASKA 49TH David W. Diller CE-8822 03/25/20 REGISTERED PROFESSIONAL ENGINEER

0 1"
BAR IS ONE INCH ON ORIGINAL DRAWING, IF NOT ADJUST SCALES ACCORDINGLY

HUSLIA, AK EROSION MITIGATION WATER SYSTEM MODIFICATIONS ISSUED FOR AGENCY REVIEW

MRK	DATE	DESCRIPTION	INIT

PLAN SET:	HSL-19-007
PROJ MGR:	JVS
PROJ ENG:	DWD
DRUMS ENG:	XXX
DRAWN BY:	KEG

SHEET TITLE

JUMPER LINE TIE-IN DETAILS

CW-502

SHEET 4 OF 4

NOTE:

(1) 12" IF JACKET DIAMETER IS 15 3/4" OR LESS, 18" IF JACKET DIAMETER IS GREATER THAN 15 3/4".

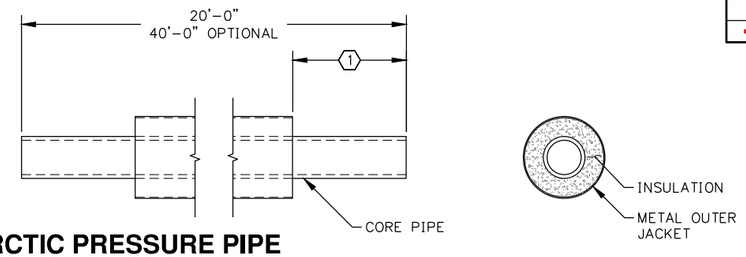

NOMINAL CORE PIPE DIAMETER	NOMINAL JACKET DIAMETER
~~4"~~	~~12"~~
6"	12"
~~6"~~	~~15"~~

D1 ARCTIC PRESSURE PIPE

1" = 1'-0"

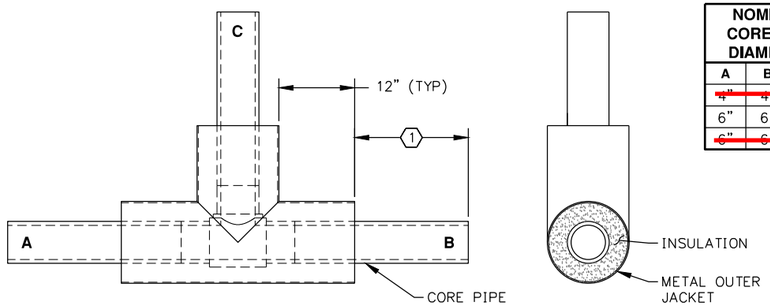

NOMINAL CORE PIPE DIAMETER			NOMINAL JACKET DIAMETER		
A	B	C	A	B	C
~~4"~~	~~4"~~	~~4"~~	~~12"~~	~~12"~~	~~12"~~
6"	6"	6"	12"	12"	12"
~~6"~~	~~6"~~	~~6"~~	~~15"~~	~~15"~~	~~15"~~

C1 ARCTIC TEE PRESSURE FITTING

1" = 1'-0"

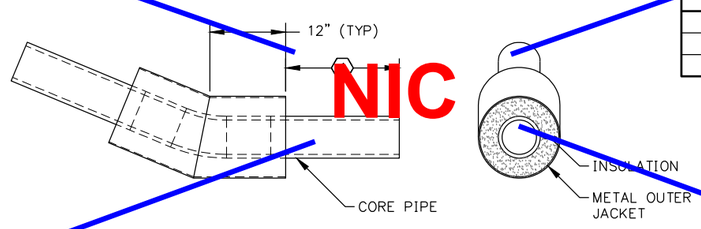

NOMINAL CORE PIPE DIAMETER	NOMINAL JACKET DIAMETER
4"	12"
6"	12"
6"	15"

B1 ARCTIC 22.5 DEGREE PRESSURE FITTING

1" = 1'-0"

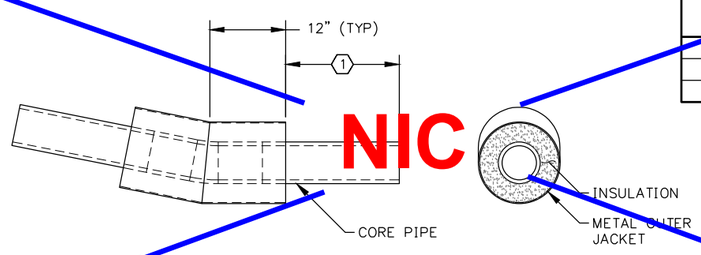

NOMINAL CORE PIPE DIAMETER	NOMINAL JACKET DIAMETER
4"	12"
6"	12"
6"	15"

A1 ARCTIC 11.25 DEGREE PRESSURE FITTING

1" = 1'-0"

NOTE:

THIS DRAWING DEPICTS PLAIN ARCTIC PIPE ONLY. SEE SPECIFICATIONS FOR ELECTRIC OR GLYCOL HEAT TRACE REQUIREMENTS.

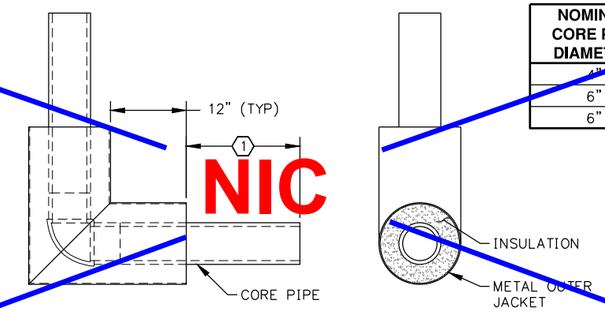

NOMINAL CORE PIPE DIAMETER	NOMINAL JACKET DIAMETER
4"	12"
6"	12"
6"	15"

D3 ARCTIC TIGHT RADIUS 90 DEGREE PRESSURE FITTING

1" = 1'-0"

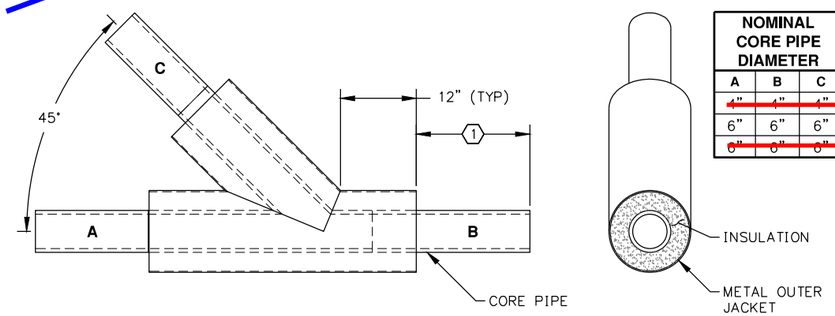

NOMINAL CORE PIPE DIAMETER			NOMINAL JACKET DIAMETER		
A	B	C	A	B	C
~~4"~~	~~4"~~	~~4"~~	~~12"~~	~~12"~~	~~12"~~
6"	6"	6"	12"	12"	12"
~~6"~~	~~6"~~	~~6"~~	~~15"~~	~~15"~~	~~15"~~

C3 ARCTIC WYE PRESSURE FITTING

1" = 1'-0"

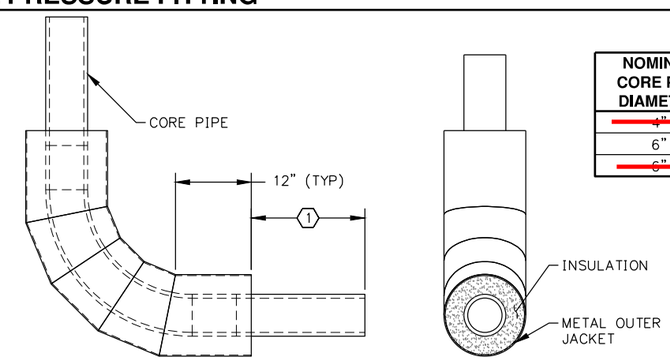

NOMINAL CORE PIPE DIAMETER	NOMINAL JACKET DIAMETER
~~4"~~	~~12"~~
6"	12"
~~6"~~	~~15"~~

B3 ARCTIC 90 DEGREE PRESSURE FITTING

1" = 1'-0"

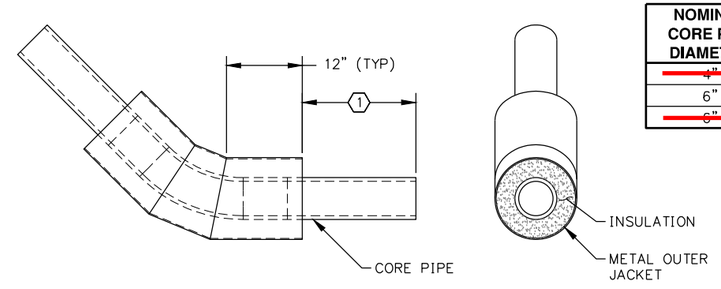

NOMINAL CORE PIPE DIAMETER	NOMINAL JACKET DIAMETER
~~4"~~	~~12"~~
6"	12"
~~6"~~	~~15"~~

A3 ARCTIC 45 DEGREE PRESSURE FITTING

1" = 1'-0"

Division of Environmental Health and Engineering
4500 Diplomacy Drive
Anchorage, Alaska 99508
(907) 729-3600

ARCTIC PRESSURE PIPE AND FITTINGS

STANDARD DETAIL

THE REGISTERED ENGINEER FOR THE PROJECT IS RESPONSIBLE FOR THE PROPER APPLICATION AND INTEGRATION OF THESE DETAILS AND ANY MODIFICATIONS SHOWN. THE ALASKA NATIVE TRIBAL HEALTH CONSORTIUM (ANTHC) OR ITS AGENTS OR EMPLOYEES SHALL NOT BE HELD RESPONSIBLE FOR THE ACCURACY OR COMPLETENESS OF SCANNED COPIES OF THIS PLAN SHEET. THIS DRAWING HAS BEEN PREPARED BY ANTHC AS AN INSTRUMENT OF SERVICE AND SHALL REMAIN THE PROPERTY OF ANTHC. ANTHC SHALL RETAIN ALL COMMON LAW, STATUTORY AND OTHER RESERVED RIGHTS, INCLUDING COPYRIGHT THERETO.

0 1"

BAR IS ONE INCH ON ORIGINAL DRAWING, IF NOT ADJUST SCALES ACCORDINGLY

SD-130

SHEET 1 OF 1

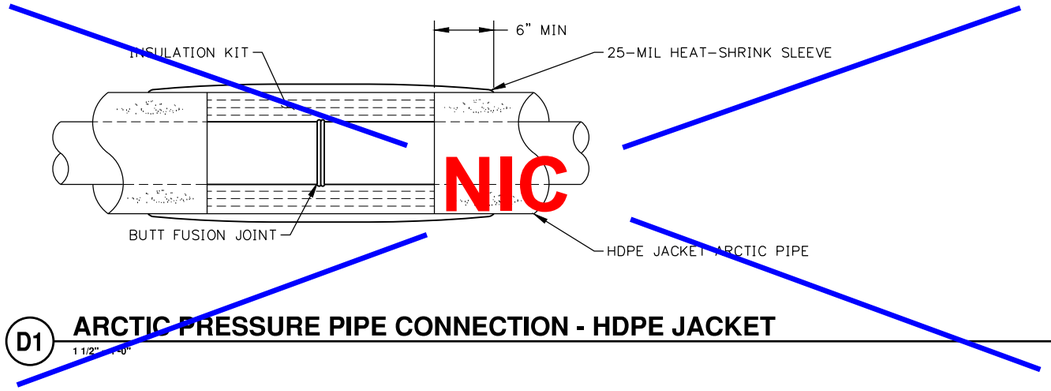

D1 ARCTIC PRESSURE PIPE CONNECTION - HDPE JACKET

1 1/2" = 1'-0"

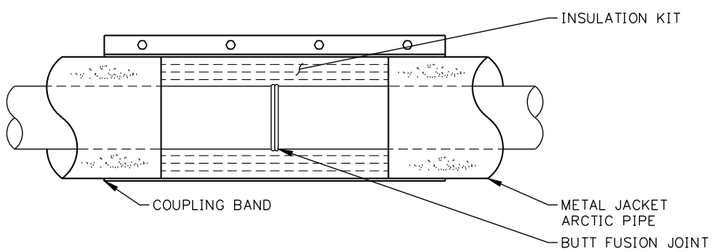

C1 ARCTIC PRESSURE PIPE CONNECTION - METAL JACKET

1 1/2" = 1'-0"

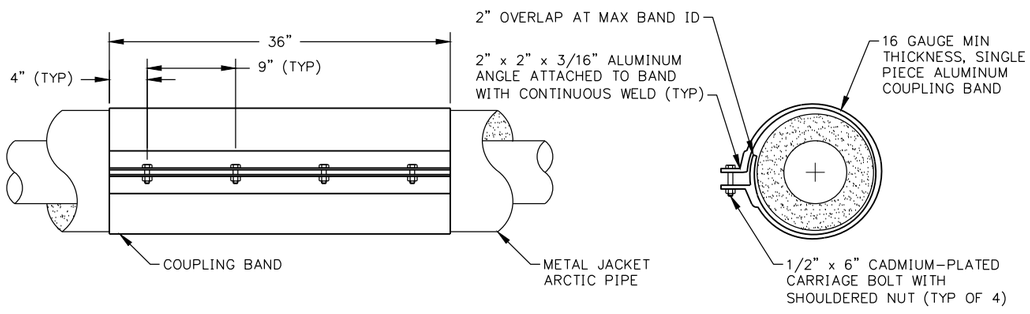

B1 ARCTIC PRESSURE PIPE COUPLING BAND

1 1/2" = 1'-0"

NOMINAL WASHER	DIMENSIONS	
	ID	OD
2"	2 3/8"	8"
3"	3 1/2"	12"
4"	4 1/2"	12"
6"	6 5/8"	12"
8"	8 5/8"	16"

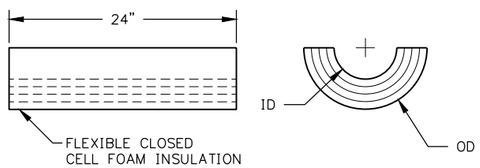

A1 PRESSURE PIPE HALF SHELL INSULATION

1 1/2" = 1'-0"

NOTES:

1. WATER MAIN JOINTS WILL BE INSTALLED A MINIMUM OF 10 FEET FROM SEWER MAIN JOINTS.
2. IF POSSIBLE CENTER WATER MAIN AT THE SEWER MAIN CROSSING TO MAXIMIZE JOINT SPACING.
3. FUSION JOINTS AT SEWER CROSSING WILL BE VISUALLY INSPECTED BEFORE AND AFTER TO ENSURE JOINTS ARE FUSED PROPERLY.
4. USE FUSION JOINTS AT SEWER CROSSING TO PROVIDE SECONDARY CONTAINMENT. RECORD INFORMATION IN JOINT FUSION LOG.
5. BUTT FUSION JOINTS ARE THE RECOMMENDED METHOD OF JOINING.
6. ELECTROFUSION COUPLINGS ARE NOT TO BE USED UNLESS ABSOLUTELY NECESSARY.
7. WRAP JOINT WITH INSULATION HALF SHELL, CUT TO FIT, AND SEAL WITH BITUTHENE WRAP IN SATURATED AREAS.
8. ALL INSULATION DIMENSIONS ± 1/8".

Division of Environmental Health and Engineering
4500 Diplomacy Drive
Anchorage, Alaska 99508
(907) 729-3600

ARCTIC PRESSURE PIPE CONNECTIONS

STANDARD DETAIL

THE REGISTERED ENGINEER FOR THE PROJECT IS RESPONSIBLE FOR THE PROPER APPLICATION AND INTEGRATION OF THESE DETAILS AND ANY MODIFICATIONS SHOWN. THE ALASKA NATIVE TRIBAL HEALTH CONSORTIUM (ANTHC) OR ITS AGENTS OR EMPLOYEES SHALL NOT BE HELD RESPONSIBLE FOR THE ACCURACY OR COMPLETENESS OF SCANNED COPIES OF THIS PLAN SHEET. THIS DRAWING HAS BEEN PREPARED AND SHALL REMAIN THE PROPERTY OF ANTHC. ANTHC SHALL RETAIN ALL COMMON LAW, STATUTORY AND OTHER RESERVED RIGHTS, INCLUDING COPYRIGHT THERETO.

0 1"
BAR IS ONE INCH ON ORIGINAL DRAWING, IF NOT ADJUST SCALES ACCORDINGLY

SD-131

SHEET 1 OF 1

NOTES:

1. INSTALL #12 STRANDED COPPER TYPE UL HMWPE (HIGH MOLECULAR WEIGHT POLYETHYLENE) TRACER WIRE DIRECTLY ON TOP OF WATER PIPE FOR FUTURE LOCATION. (TYPE PTW, 75 DEG. C / 600V, SERVICE WIRE CO.) DAYLIGHT ENDS OF TRACE WIRE AT EACH FLUSH HYDRANT.
2. MINIMUM 36" BURY REQUIRED TO PREVENT TRAFFIC LOADS FROM CRUSHING PIPE. ENGINEER MAY SPECIFY RIGID INSULATION OR DEEPER MINIMUM BURY FOR FREEZE PROTECTION, AND MAY SPECIFY DEEPER BURIAL FOR HEAVY TRAFFIC LOADS.
3. SLOPE TRENCH WALLS AS REQUIRED FOR SAFETY.

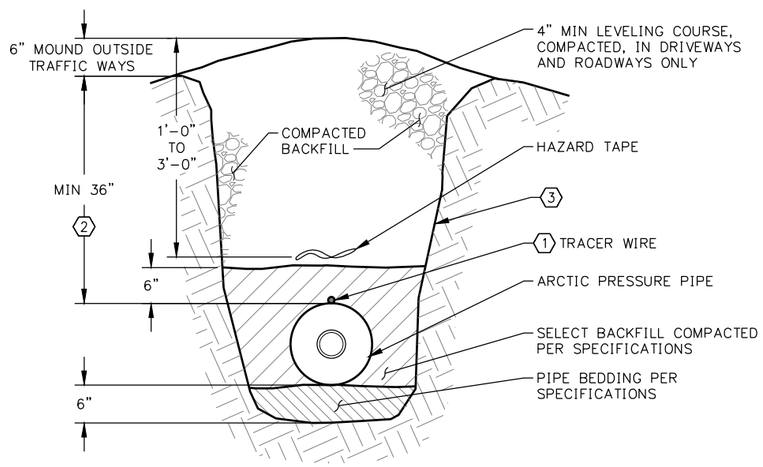

C1 ARCTIC PRESSURE PIPE IN GRANULAR SOILS

1" = 1'-0"

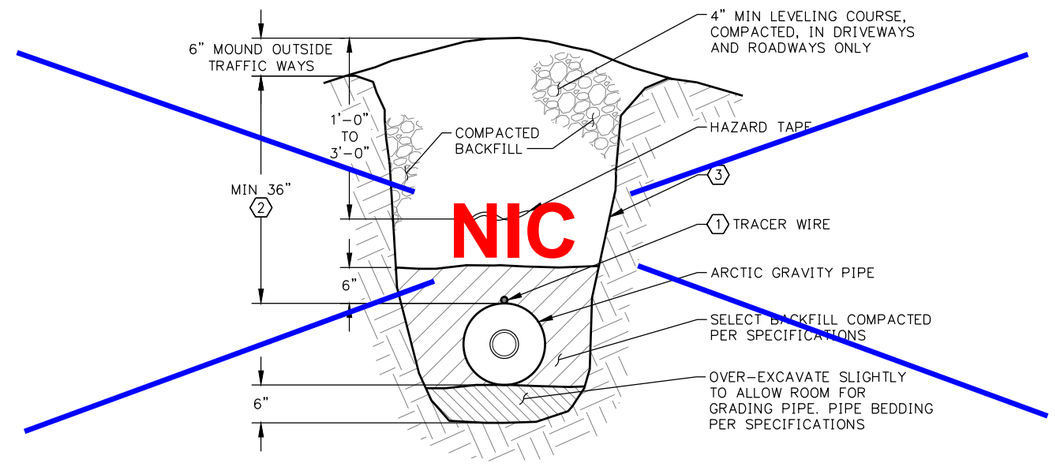

C3 ARCTIC GRAVITY PIPE IN GRANULAR SOILS

1" = 1'-0"

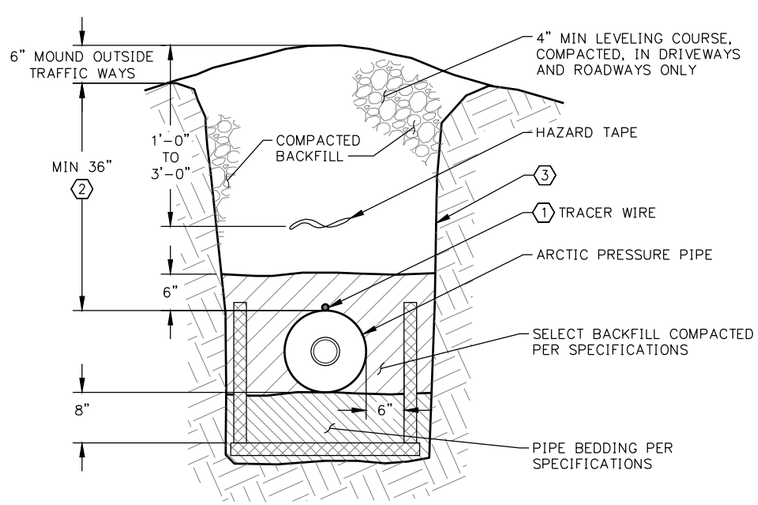

A1 ARCTIC PRESSURE PIPE IN PERMAFROST

1" = 1'-0"

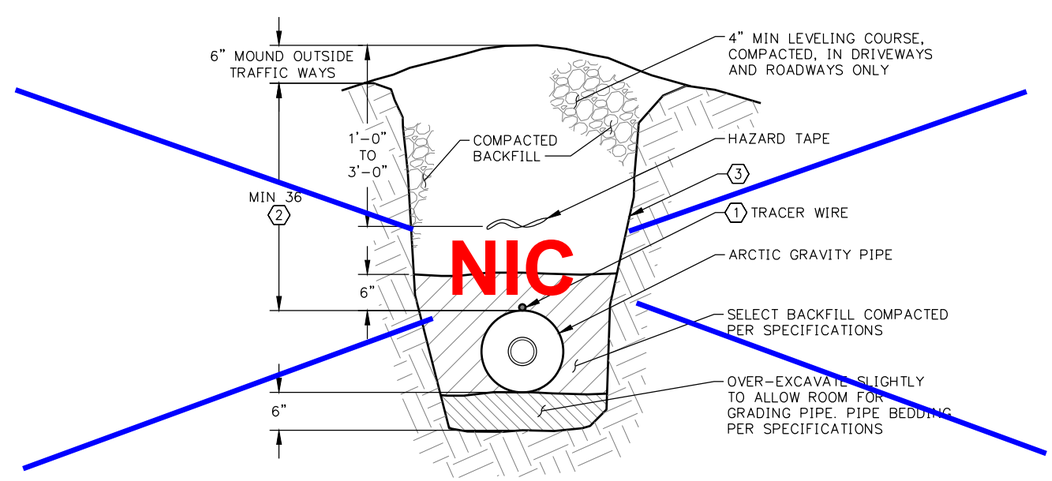

A3 ARCTIC PRESSURE PIPE IN ROCKY SOILS

1" = 1'-0"

Division of Environmental Health and Engineering
4500 Diplomacy Drive
Anchorage, Alaska 99508
(907) 729-3600

INSULATED PIPE TRENCH SECTIONS

STANDARD DETAIL

THE REGISTERED ENGINEER FOR THE PROJECT IS RESPONSIBLE FOR THE PROPER APPLICATION AND INTEGRATION OF THESE DETAILS AND ANY MODIFICATIONS SHOWN. THE ALASKA NATIVE TRIBAL HEALTH CONSORTIUM (ANTHC) OR ITS AGENTS OR EMPLOYEES SHALL NOT BE HELD RESPONSIBLE FOR THE ACCURACY OR COMPLETENESS OF SCANNED COPIES OF THIS PLAN SHEET. THIS DRAWING HAS BEEN PREPARED BY ANTHC AS AN INSTRUMENT OF SERVICE AND SHALL REMAIN THE PROPERTY OF ANTHC. ANTHC SHALL RETAIN ALL COMMON LAW, STATUTORY AND OTHER RESERVED RIGHTS, INCLUDING COPYRIGHT THERETO.

0 1"

BAR IS ONE INCH ON ORIGINAL DRAWING, IF NOT ADJUST SCALES ACCORDINGLY

SD-150

SHEET 1 OF 1