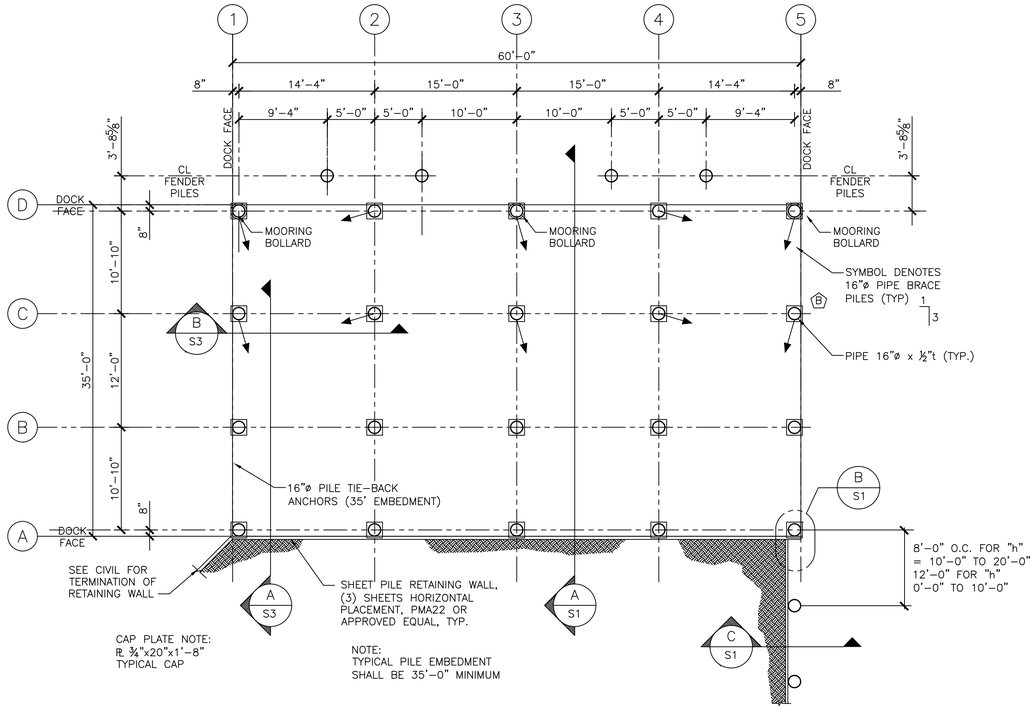

1/S1 DOCK PILE & PILE CAP PLAN

SCALE 1/8"= 1'-0"

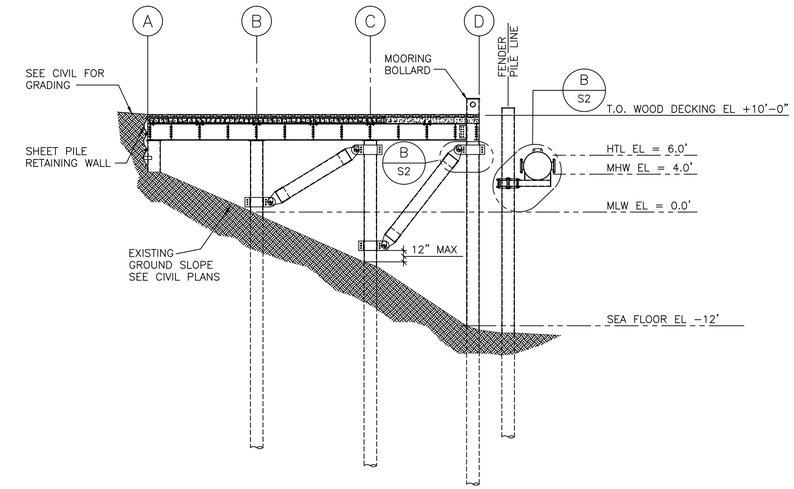

NOTE:
PILES, 40 TON BEARING CAPACITY, 35' MINIMUM EMBEDMENT

A/S1 TYPICAL DOCK SECTION

SCALE 1/8"= 1'-0"

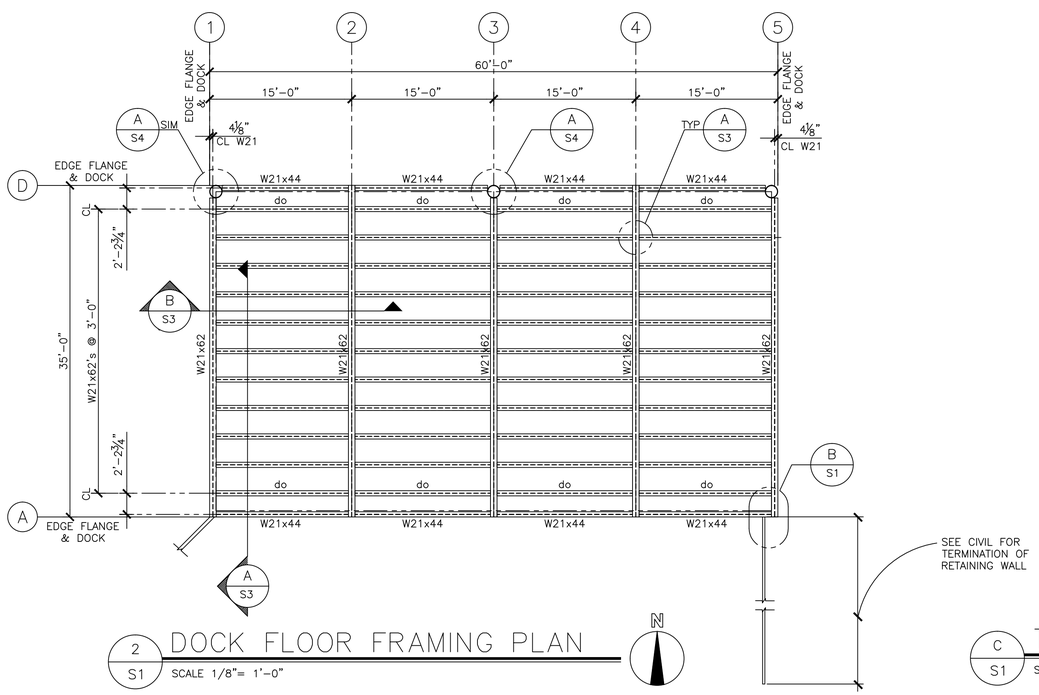

2/S1 DOCK FLOOR FRAMING PLAN

SCALE 1/8"= 1'-0"

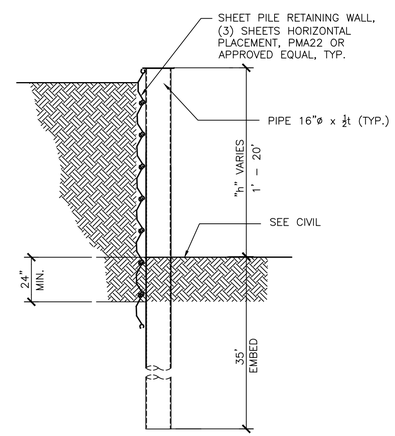

C/S1 TYPICAL RETAINING WALL SECTION

SCALE 1/4"= 1'-0"

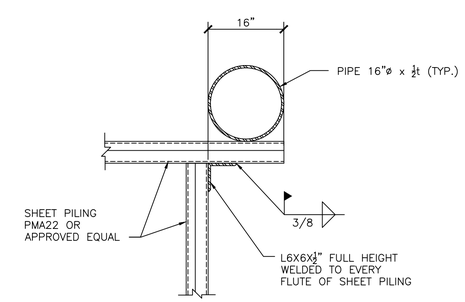

B/S1 RETAINING WALL INTERSECTION

SCALE 3/4"= 1'-0"

NO.	DATE	BY	REVISION

LARSEN CONSULTING GROUP, Inc.
architecture · engineering · surveying
3710 Woodland Dr.
Suite 2100
Anchorage, AK 99517
(907) 243-8985

ALEUT COMMUNITY OF ST. PAUL

IRA DOCK FACILITY

VILLAGE COVE SMALL BOAT HARBOR

PILE LOCATION & FRAMING PLANS
TYPICAL DOCK SECTION

SCALE:	AS NOTED
DESIGNED BY:	DG
DRAWN BY:	MC
CHECKED BY:	DG
DATE:	8/30/12
FILE NO.	933.01

SHEET NUMBER

S1 OF 6

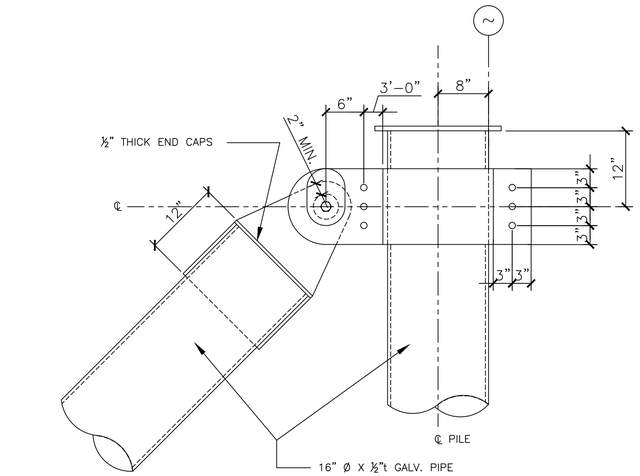

ELEVATION "A"

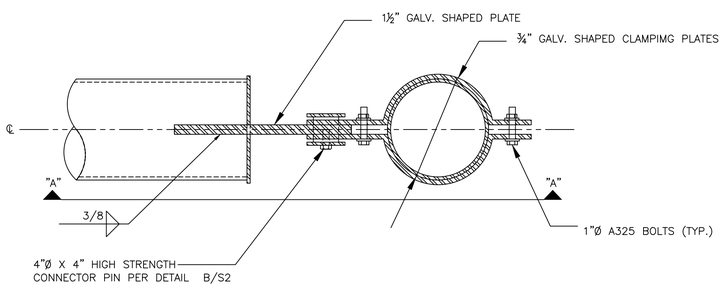

PLAN VIEW

A/S2 PILE BRACE DETAIL

SCALE 1"= 1'-0"

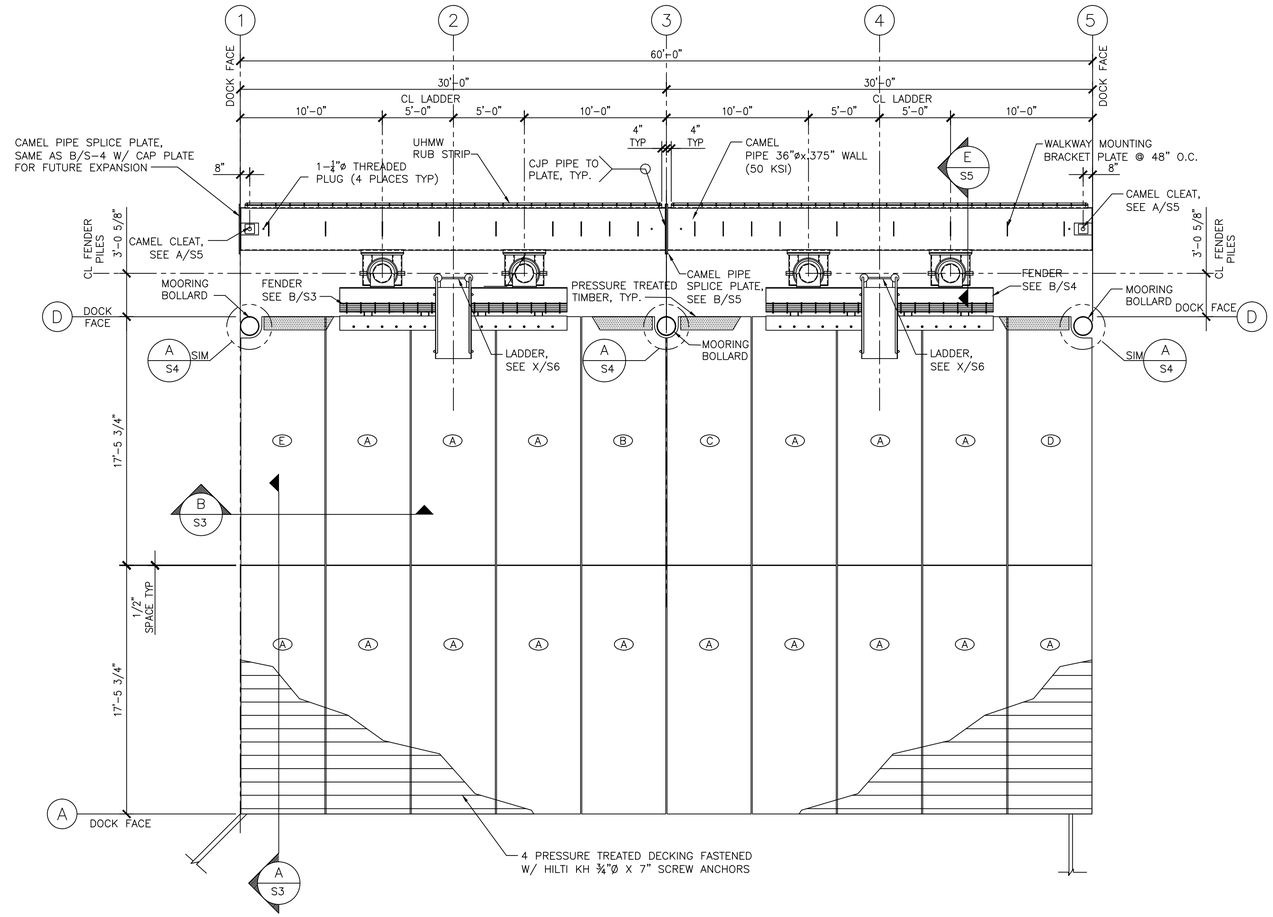

1/S2 PRECAST CONCRETE PANEL & FENDER LOCATION PLAN

SCALE 3/16"= 1'-0"

N

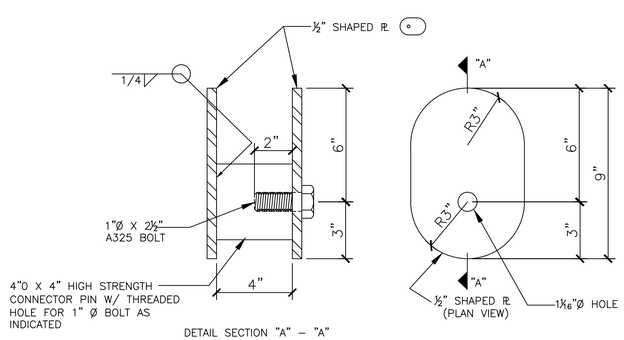

B/S2 CONNECTOR PIN DETAIL

SCALE 3"= 1'-0"

NO.	DATE	BY	REVISION

LARSEN CONSULTING GROUP, Inc.
architecture · engineering · surveying
3710 Woodland Dr.
Suite 2100
Anchorage, AK 99517
(907) 243-8085

ALEUT COMMUNITY OF ST. PAUL

IRA DOCK FACILITY
VILLAGE COVE SMALL BOAT HARBOR

PRECAST CONCRETE PANEL
& DOCK FENDER LOCATION PLANS

SCALE:	AS NOTED
DESIGNED BY:	DG
DRAWN BY:	MC
CHECKED BY:	DG
DATE:	8/30/12
FILE NO.	933.01
SHEET NUMBER	
S2	OF 6

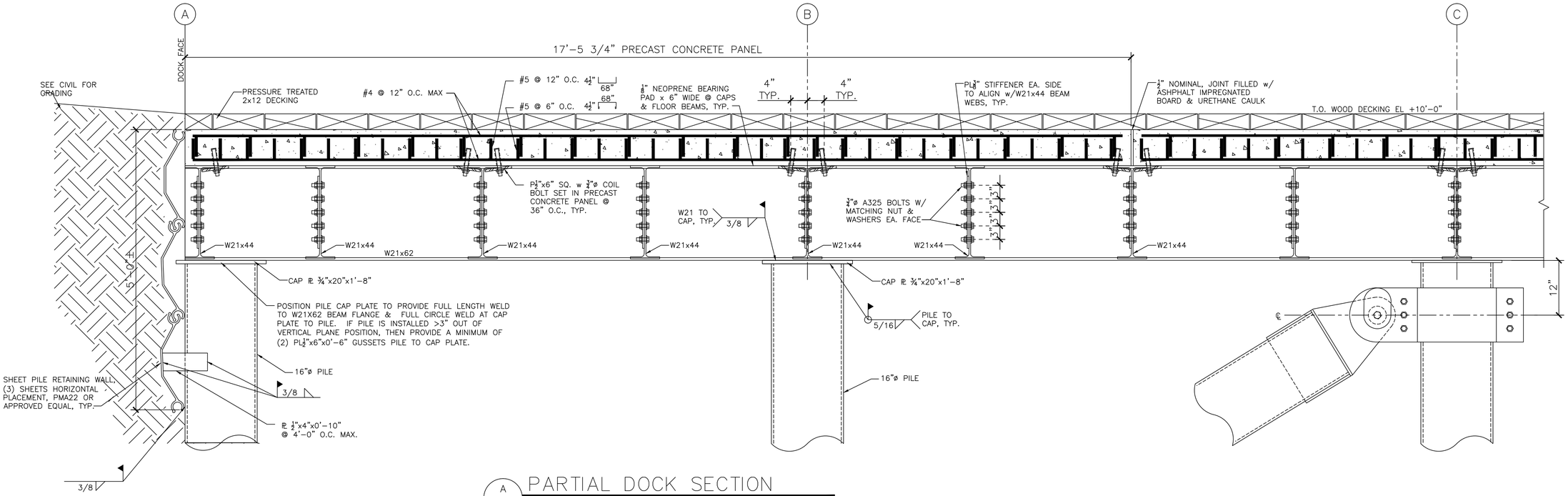

A / S3 PARTIAL DOCK SECTION

SCALE 1"= 1'-0"

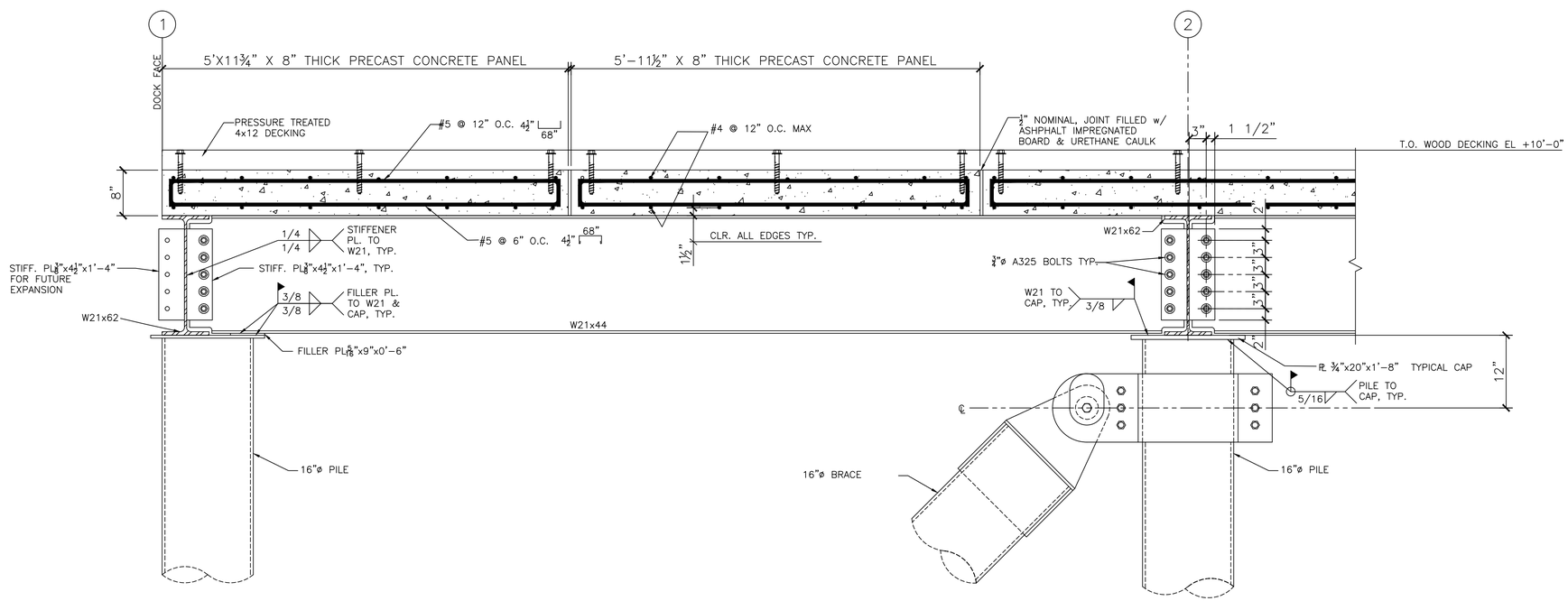

B / S3 PARTIAL DOCK SECTION

SCALE 1"= 1'-0"

NO.	DATE	BY	REVISION

LARSEN CONSULTING GROUP, Inc.
architecture · engineering · surveying
3710 Woodland Dr.
Suite 2100
Anchorage, AK. 99517
(907) 243-8885

ALEUT COMMUNITY OF ST. PAUL

IRA DOCK FACILITY

VILLAGE COVE SMALL BOAT HARBOR

PARTIAL DOCK SECTIONS & DETAILS

SCALE:	AS NOTED
DESIGNED BY:	DG
DRAWN BY:	MC
CHECKED BY:	DG
DATE:	8/30/12
FILE NO.	933.01
SHEET NUMBER	
S3	OF 6

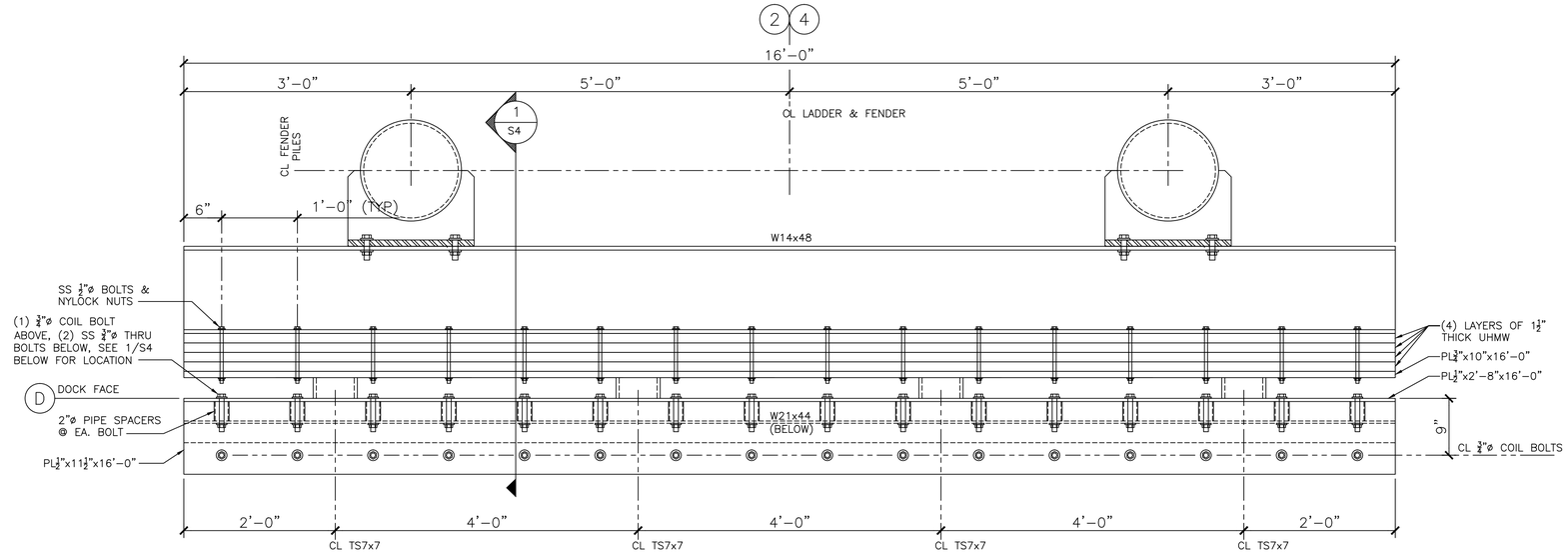

B/S4 DOCK FENDER PLAN

SCALE 1"= 1'-0"

NOTE:
LADDER NOT SHOWN FOR CLARITY, SEE FENDER PLAN ON S2 FOR LOCATION AND ADDITIONAL DIMENSIONS.

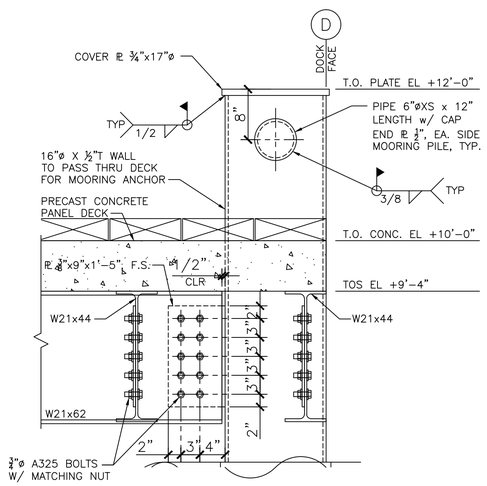

"A–A" SECTION
MOORING ANCHOR PILE

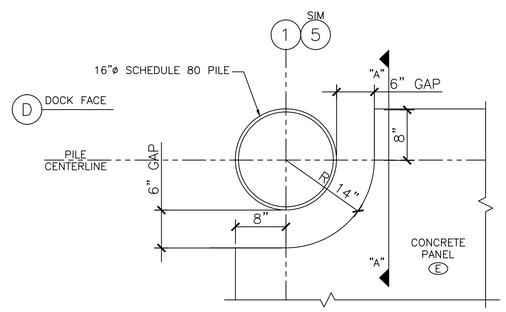

PLAN VIEW
MOORING ANCHOR PILE & CONCRETE PANELS

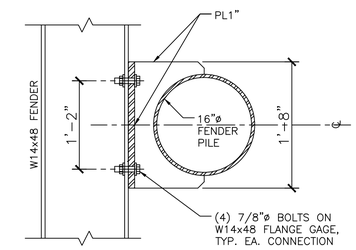

NOTE: UHMW & BOLTS NOT SHOWN FOR CLARITY

FENDER PILE ATTACHMENT B–B

SCALE: 1" = 1'-0"

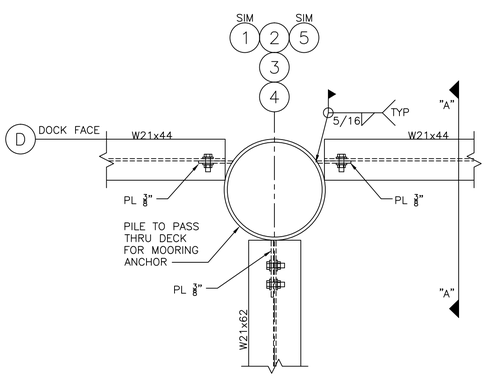

PLAN VIEW
MOORING ANCHOR PILE & WBMS

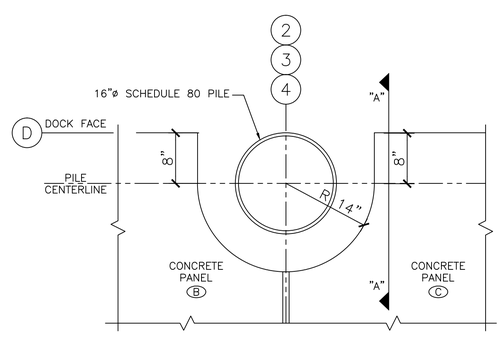

PLAN VIEW
MOORING ANCHOR PILE & CONCRETE PANELS

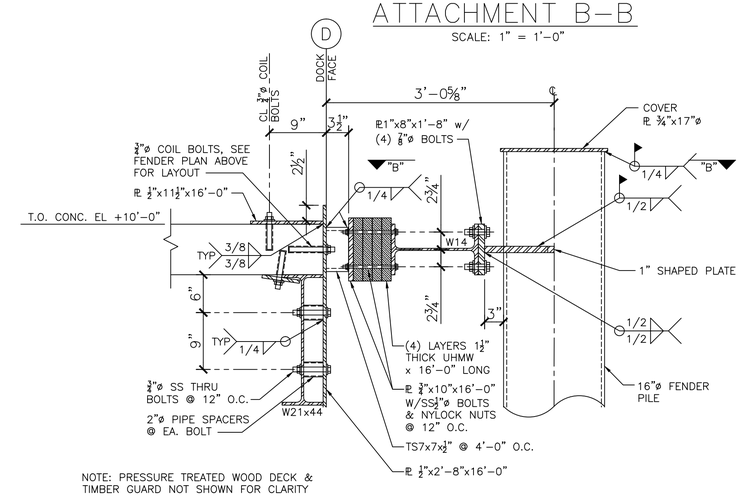

NOTE: PRESSURE TREATED WOOD DECK & TIMBER GUARD NOT SHOWN FOR CLARITY

A/S4 MOORING ANCHOR PILE PLAN

SCALE 1"= 1'-0"

1/S4 DOCK FENDER ATTACHMENT

SCALE 1"= 1'-0"

NO.	DATE	BY	REVISION

LARSEN CONSULTING GROUP, Inc.
architecture · engineering · surveying
3710 Woodland Dr.
Suite 2100
Anchorage, AK 99517
(907) 243-8965

ALEUT COMMUNITY OF ST. PAUL

IRA DOCK FACILITY
VILLAGE COVE SMALL BOAT HARBOR

PILE / FENDER PLAN, SECTIONS & DETAILS

SCALE:	AS NOTED
DESIGNED BY:	DG
DRAWN BY:	MC
CHECKED BY:	DG
DATE:	8/30/12
FILE NO.	933.01
SHEET NUMBER	
S4	OF 6

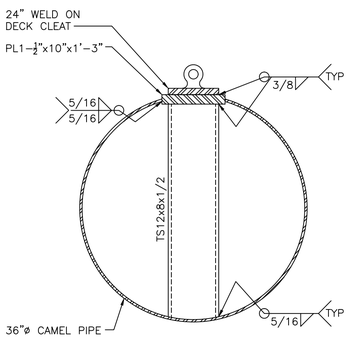

A S5 CLEAT SECTION

SCALE 1"= 1'-0"

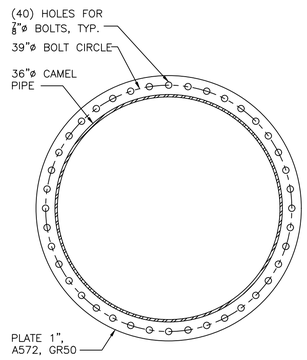

B S5 CAMEL PIPE SPLICE PLATE

SCALE 1"= 1'-0"

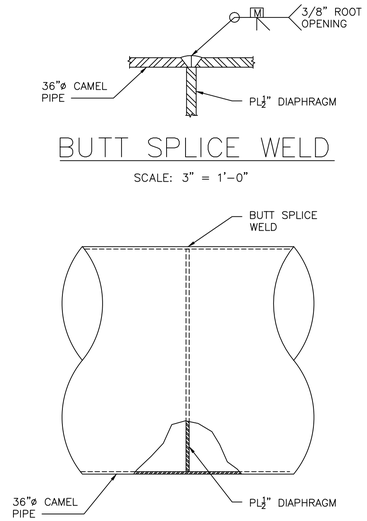

C S5 BUTT SPLICE WELD

SCALE: 3" = 1'-0"

DIAPHRAGM BUTT SPLICE

SCALE 1"= 1'-0"

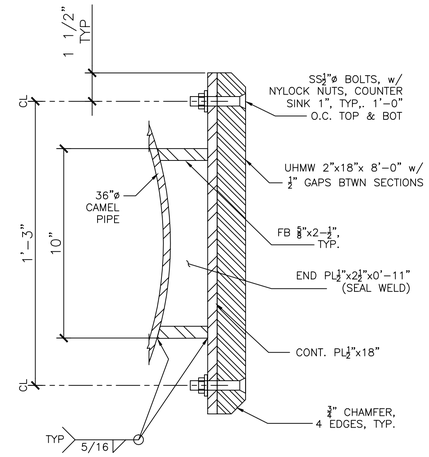

D S5 UHMW RUB STRIP

SCALE 3"= 1'-0"

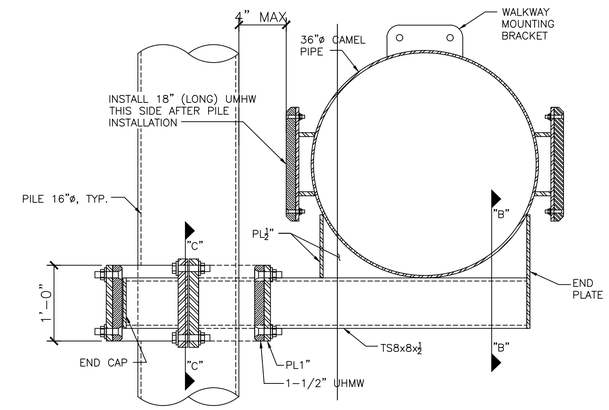

E S5 PILE HOOP SECTION A-A

SCALE 1"= 1'-0"

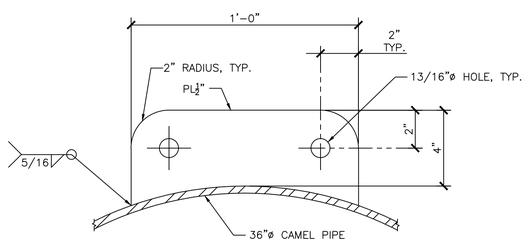

F — WALKWAY MOUNTING BRACKET

SCALE 3"= 1'-0"

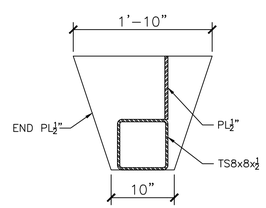

SECTION B-B

SCALE: 1" = 1'-0"

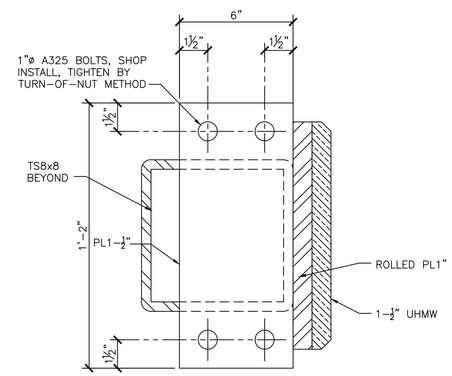

SECTION C-C

SCALE: 3" = 1'-0"

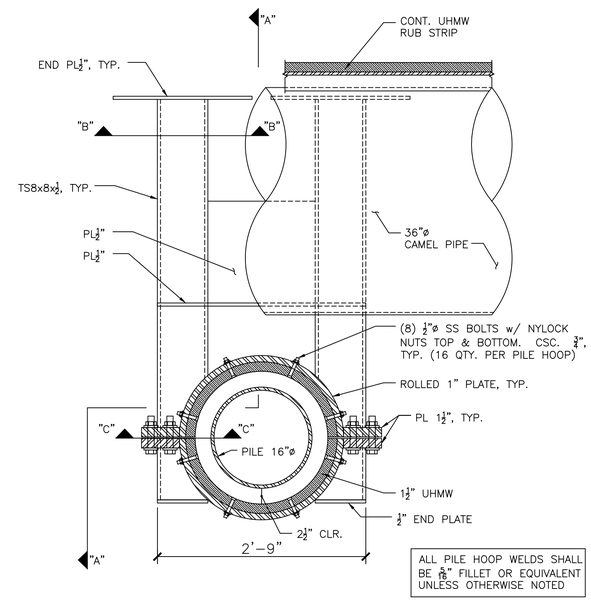

ALL PILE HOOP WELDS SHALL BE ⅜" FILLET OR EQUIVALENT UNLESS OTHERWISE NOTED

1 S5 PILE HOOP PLAN

SCALE 1"= 1'-0"

NO.	DATE	BY	REVISION

LARSEN CONSULTING GROUP, Inc.
architecture · engineering · surveying
3710 Woodland Dr.
Suite 2100
Anchorage, AK. 99517
(907) 243-6965

ALEUT COMMUNITY OF ST. PAUL

IRA DOCK FACILITY

VILLAGE COVE SMALL BOAT HARBOR

CAMEL HOOP PLAN, SECTIONS & DETAILS

SCALE:	AS NOTED
DESIGNED BY:	DG
DRAWN BY:	MC
CHECKED BY:	DG
DATE:	8/30/12
FILE NO.	933.01
SHEET NUMBER	
S5	OF 6

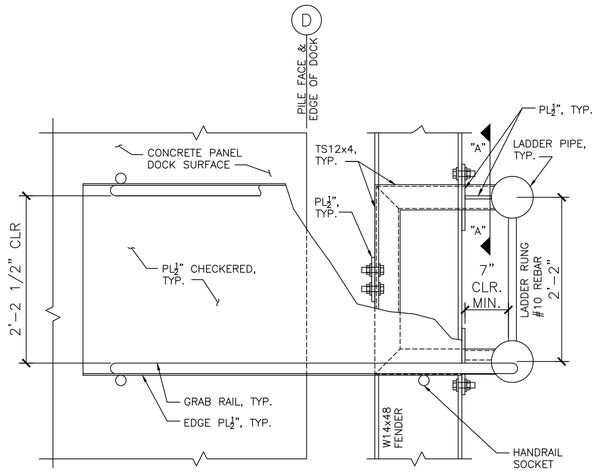

LADDER PLAN

SCALE: 1" = 1'-0"

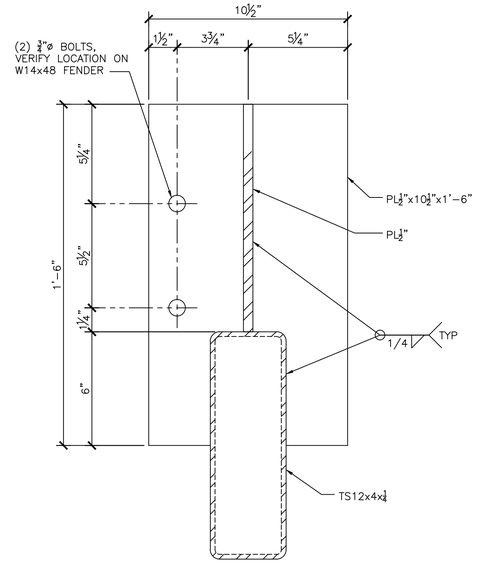

SECTION A–A

SCALE: 3" = 1'-0"

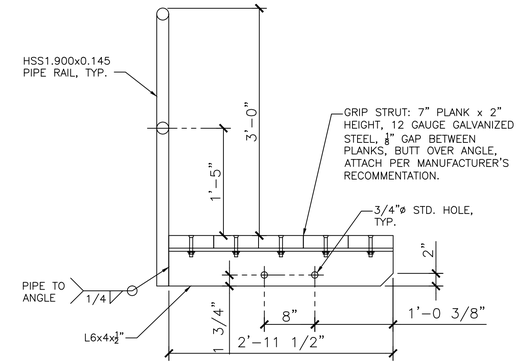

TYPICAL WALKWAY SECTION

SCALE: 1" = 1'-0"

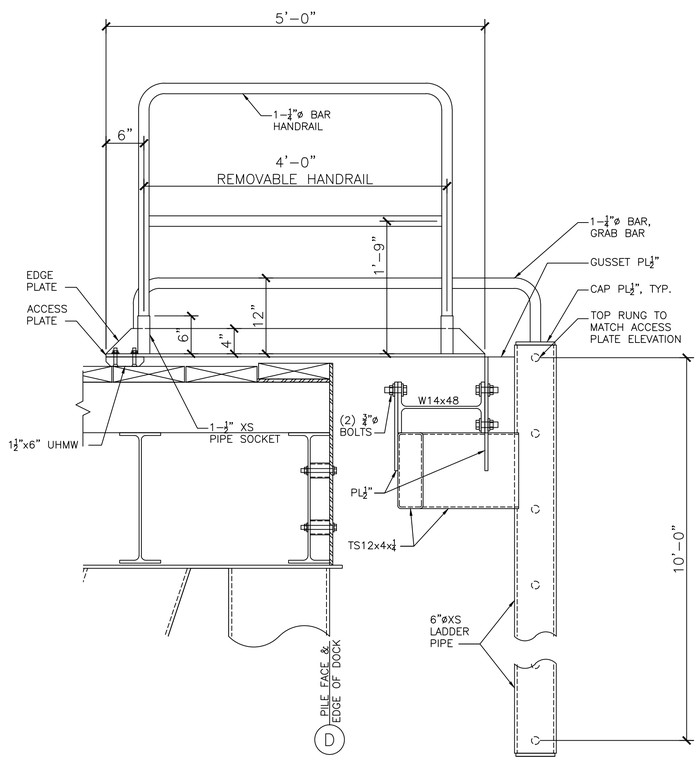

NOTE:
RUBBER FENDERS NOT SHOWN FOR CLARITY

LADDER ELEVATION

SCALE: 1" = 1'-0"

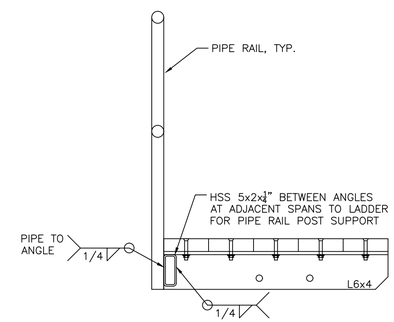

NOTE: FOR MATERIALS AND DETAILS NOT SHOWN SEE TYPICAL WALKWAY SECTION ABOVE.

WALKWAY SECTION ADJACENT TO LADDERS

SCALE: 1" = 1'-0"

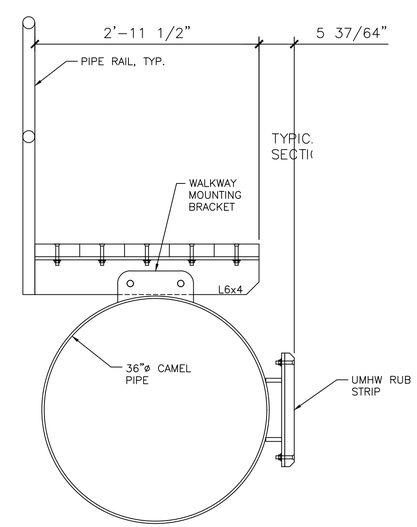

NOTE: FOR MATERIALS AND DETAILS NOT SHOWN SEE TYPICAL WALKWAY SECTION ABOVE.

WALKWAY / CAMEL SECTION

SCALE: 1" = 1'-0"

NO.	DATE	BY	REVISION

LARSEN CONSULTING GROUP, Inc.
architecture · engineering · surveying
3710 Woodland Dr.
Suite 2100
Anchorage, AK. 99517
(907) 243-6965

ALEUT COMMUNITY OF ST. PAUL

IRA DOCK FACILITY
VILLAGE COVE SMALL BOAT HARBOR

LADDER & WALKWAY PLANS
SECTIONS & DETAILS

SCALE:	AS NOTED
DESIGNED BY:	DG
DRAWN BY:	MC
CHECKED BY:	DG
DATE:	8/30/12
FILE NO.	933.01

SHEET NUMBER

S6 OF 6